AG-BAG®

G6060A
G6060B
G6060C
G6070B
G6070C
PB6000

OPERATOR'S MANUAL

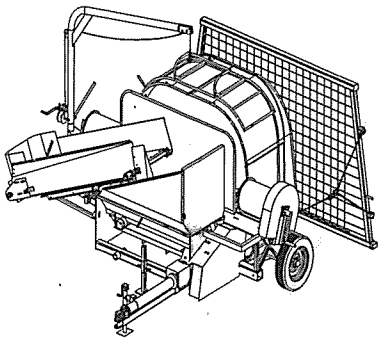

AG-BAG®

MILLER St. Nazianz since 1899

P O Box 127
511 East Main St.
St. Nazianz, WI
54232
(920) 773-2121

A900011

USING THE MANUAL.

This manual has been designed to be used with the G6060A, G6060B, G6060C, G6070B, G6070C and PB6000 Ag-Bagger®. READ THIS MANUAL carefully to learn how to operate and service your Ag-Bagger® correctly. Failure to do so could result in personal injury or equipment damage.

THIS MANUAL SHOULD BE CONSIDERED a permanent part of your Ag-Bagger® and should remain with the machine when you sell or trade it. Additional copies of the manual can be ordered using part number A900011.

For ease of use this manual is divided into the following sections. Each section has its own Table of Contents and Index:

Section 0: This section contains information general in nature, Ag-Bag® policy, Warranty and whom to contact.

Section 1: Safety. This section presents safety information for use with the Ag-Bagger®. General information as well as specific safety guidelines is detailed here. Labels used on the Ag-Bagger® and general safety warnings are also shown.

Section 2: Machine Overview. The machine overview section shows and identifies the location of many of the commonly used features of the Ag-Bagger®.

Section 3: Features and Controls. Pictures depicting the many features and controls with a description of what each does are shown in this section.

Section 4: Set-up and Operating Procedures. This section gives you and your employee's general information on the setup and operation of your Ag-Bagger®.

Section 5: Bagging and the Terrain. This section deals with placing the bag and preparing the site for best result. Also covered is maintaining the correct tension on the cables for best compactions.

Section 6: Trouble Shooting. This section is not intended to address all the possible problems that might arise during bagging. It is intended to review some of the common problems that might arise during the bagging operation.

Section 7: Service and Maintenance. The information provided in this section is given for general information only. It is to help you to service and maintain the Ag-Bagger®.

Appendix A: Parts. The parts manual for your Ag-Bagger® are contained in this section.

Appendix B: The 3M's of Silage. A more technical look at bagging is presented in this section.

Appendix C: Bagging Instructions. A more detailed look and discussion of the bagging operation.

IT IS YOUR RESPONSIBILITY TO READ ALL SECTIONS OF THIS MANUAL BEFORE OPERATING YOUR AG-BAGGER®!

Table of Contents

Machine Serial Number: _____

Date Of Purchase: _____

Dealership Name: _____

Dealership Phone No: _____

IT IS YOUR RESPONSIBILITY TO READ ALL SECTIONS OF THIS MANUAL BEFORE OPERATING YOUR AG-BAGGER®!

TO THE OWNER:

This manual contains information concerning the operation, adjustment and maintenance of the Models PB6000, G6060A, G6060B, G6060C, G6070B and G6070C AG-BAGGER®. You have purchased a dependable machine, but only by proper care and operation can you expect to receive the performance and long service built into this AG-BAGGER®. Please have all operators read this manual carefully, and keep it available for ready reference.

These machines were designed to be towed by an agricultural tractor and powered by the tractor's power take-off. They are intended to bag a variety of forage crops, high moisture grains, commodities, by-products, brewers grains, etc.

Your Ag-Bag® Dealer will instruct you in the general operation of your AG-BAGGER®. Your Dealer's staff of factory-trained service technicians will be glad to answer any questions that may arise regarding the operation of your Ag-BAGGER®.

Your Ag-Bag® Dealer carries a complete line of genuine Ag-Bag® parts. These parts are manufactured and carefully inspected in the same factories that built the AG-BAGGER® to ensure high quality and accurate fitting of any necessary replacement parts.

CAUTION: THIS SYMBOL IS USED THROUGHOUT THIS BOOK WHENEVER PERSONAL SAFETY IS INVOLVED. TAKE TIME TO READ AND FOLLOW THE INSTRUCTIONS. BE CAREFUL!

CAUTION: PICTURES IN THIS MANUAL MAY SHOW PROTECTIVE SHIELDING OPEN OR REMOVED TO BETTER ILLUSTRATE A PARTICULAR FEATURE OR ADJUSTMENT.

BE CERTAIN, HOWEVER, TO CLOSE OR REPLACE ALL SHIELDING BEFORE OPERATING THE MACHINE.

IMPROVEMENTS

Ag-Bag, a Miller-St. Nazianz Company, is continually striving to improve its products. We reserve the right to make improvements or changes when it becomes practical and possible to do so, without incurring any obligation to make changes, or additions to the equipment sold previously.

IT IS YOUR RESPONSIBILITY TO READ ALL SECTIONS OF THIS MANUAL BEFORE OPERATING YOUR AG-BAGGER®!

OWNER ASSISTANCE

We at Ag-Bag® and your Ag-Bag® Dealer want you to be completely satisfied with your investment. Normally any problems with your equipment will be handled by your Dealer's Service Department. If your problem has not been handled to your satisfaction, we suggest the following.

1. Contact the owner or General Manager of the Dealership, explain the problem, and request assistance.

2. If you are still not satisfied contact our corporate office and provide them with:

   - Your name, address, and telephone number
   - Machine model and serial number
   - Dealership name and address
   - Machine purchase date and amount of use
   - Nature of problem

Corporate Office:

Ag-Bag
Miller-St. Nazianz Inc.
511 East Main PO Box 127
St. Nazianz, WI 54232
Telephone: (920) 773-2121

Please Note: When contacting the corporate office, your problem will likely be resolved at the Dealership using the Dealer's facilities, equipment, and personnel. It is important that your initial contact be with the Dealer.

IDENTIFYING YOUR AG-BAGGER®.

The serial number plate for you Ag-Bagger® is located on the left side of the machine on the bag boom receiver. It contains the (1) Model and (2) Serial Number for your machine. When calling for parts or other information about your Ag-Bagger® be sure you have this number available.

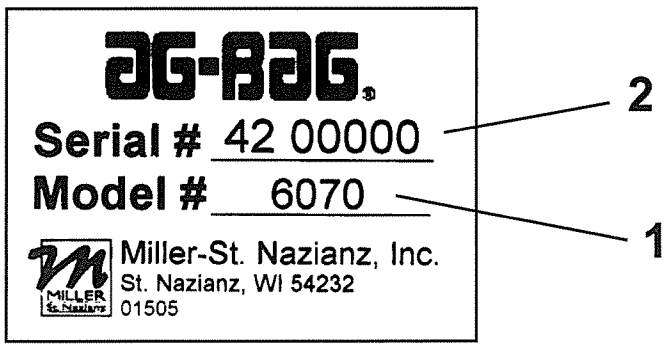

IT IS YOUR RESPONSIBILITY TO READ ALL SECTIONS OF THIS MANUAL BEFORE OPERATING YOUR AG-BAGGER®!

MACHINE WARRANTY
6000 Series Bagger®

MILLER-ST. NAZIANZ, INC. warrants each new Ag-Bag® 6000 series Bagger® to be free from defects in material and workmanship under recommended use and service, as stated in the Operator's Manual, as follows:

Warranty
Miller will replace, F.O.B. St. Nazianz, Wisconsin, or repair, as Miller elects, any part of a new 6000 series Bagger® which is defective in material or workmanship: Without charge for either parts or labor during the first year following delivery to the original retail customer.

The warranty period for equipment used for commercial, industrial, lease, rental and custom operation or any non agricultural use is limited to 90 days from date of delivery to the first retail user.

All warranties on the new 6000 series Bagger® shall apply only to the original retail purchaser from an authorized Ag-Bag dealer.

Repair Parts
Miller warrants that it will replace F.O.B. St. Nazianz, Wisconsin, or repair, as Miller elects, without charge, any genuine Ag-Bag spare part purchased after the expiration of the new 6000 series Bagger® warranty, or to any subsequent owners that is defective in material or workmanship, within ninety (90) days of the installation date.

Misuse
The provisions of this warranty shall not apply to any 6000 series Bagger® which has been subject to misuse, negligence, alteration or accident, or which shall have been repaired with parts other than those obtainable through Ag-Bag.

Authorized Dealer
Repairs eligible for labor warranty must be made by Ag-Bag or an authorized Ag-Bag dealer. The purchaser is responsible for transportation of the equipment to the dealership for warranty service or for any service call expense.

Exclusive Effect of Warranty and Limitation of Liability
The remedies of the customer set forth herein are exclusive. Miller neither assumes nor authorizes any person to assume any other obligation or liability in connection with the sale of covered equipment. Correction of defects and malfunctions in the manner and for the applicable period of time provided above shall constitute fulfillment of all responsibilities of Miller to the customer and Miller shall not be liable for negligence, under contract, or in any other manner with respect to such equipment. IN NO EVENT SHALL THE OWNER BE ENTITLED TO RECOVER FOR INCIDENTAL OR CONSEQUENTIAL DAMAGES SUCH AS BUT NOT LIMITED TO: LOSS OF CROPS, LOSS OF PROFITS OR REVENUE, OTHER COMMERCIAL LOSSES, INCONVENIENCE OR COST OF RENTAL OF REPLACEMENT EQUIPMENT.

THIS WARRANTY IS IN LIEU OF ALL WARRANTIES OF MERCHANTABILITY, FITNESS FOR A PURPOSE OR OTHER WARRANTIES, EXPRESS OR IMPLIED.

Warranty Requirements
To be covered by warranty, each machine must be properly registered with Miller within 30 days of date of original retail delivery.

IT IS YOUR RESPONSIBILITY TO READ ALL SECTIONS OF THIS MANUAL BEFORE OPERATING YOUR AG-BAGGER®!

BAG WARRANTY

Bags

All recommendations or suggestions of use are made without guarantee, since conditions of use are beyond our control. Miller maintains no obligation or liabilities for consequential damages arising out of or in connection with use of this product, including, but not limited to inconveniences, loss of profit, commercial loss, feed loss of any type, or costs of removal, installation or reinstallation.

Warranty

Miller can offer this unequaled warranty because of our commitment to quality, years of experience as the leading provider of silage bags, and use of the latest plastic technology. We recognize that the quality and reliability of the bagging system is dependent on a team effort between Miller and you, the customer. Miller's part of the teamwork is to provide you with a top quality silage bag.

Miller's Part

Miller warrants its "Tri-Dura®" silage bags to be free of defects in workmanship and materials. If a properly packed bag should fail from defect during normal life, Miller will replace the bag without charge F.O.B. plastic facility. If the feed in the damaged bag requires rebagging, Miller will replace the bag with the initial replacement bag discussed above plus one more bag, for a total of two bags.

The Customer Part

Most of the factors that control the quality and reliability of the bagging system are in the customer's hands. These include choice of forage crops, harvesting, bagging location, moisture, packing, bagging machine operations, maintenance and surveillance of bags.

Miller will provide information (Operators manual) for instruction, recommendations and suggestions about these factors but cannot and does not warrant the outcome. It is the responsibility of the customer to seek out the best information and to make his own decisions. The customer will be responsible for the profits or losses that result from the use of these products. See the 3M's of Silage in the operator's manual for recommendation of how to bag silage for proper techniques and guidelines.

Exclusive Effect of Warranty and Limitation of Liability

The remedies of the customer set forth herein are exclusive. Miller neither assumes nor authorizes any person to assume any other obligation or liability in connection with the sale of covered equipment. Correction of defects and malfunctions in the manner and for the applicable period of time provided above shall constitute fulfillment of all responsibilities of Miller to the customer and Miller shall not be liable for negligence, under contract, or in any other manner with respect to such equipment. IN NO EVENT SHALL THE OWNER BE ENTITLED TO RECOVER FOR INCIDENTAL OR CONSEQUENTIAL DAMAGES SUCH AS BUT NOT LIMITED TO: LOSS OF CROPS, LOSS OF PROFITS OR REVENUE, OTHER COMMERCIAL LOSSES, INCONVENIENCE OR COST OF RENTAL OF REPLACEMENT EQUIPMENT.

IT IS YOUR RESPONSIBILITY TO READ ALL SECTIONS OF THIS MANUAL BEFORE OPERATING YOUR AG-BAGGER®!

SAFETY ALERT WORDS

PERSONAL SAFETY

Throughout this manual, and on machine decals, you will find safety alert words ("CAUTION", "WARNING", and "DANGER") followed by specific instructions. These words are intended for the personal safety of you and those working with you. Please take the time to read them.

CAUTION

CAUTION: THE WORD "CAUTION" INDICATES A POTENTIALLY HAZARDOUS SITUATION WHICH, IF NOT AVOIDED, MAY RESULT IN MINOR OR MODERATE INJURY. IT MAY ALSO BE USED TO ALERT AGAINST "UNSAFE PRACTICES." IT IS IDENTIFIED BY A YELLOW BACKGROUND AND BLACK LETTERING.

WARNING

WARNING: THE WORD "WARNING" INDICATES A POTENTIALLY HAZARDOUS SITUATION WHICH, IF NOT AVOIDED, COULD RESULT IN SERIOUS INJURY OR DEATH. IT IS IDENTIFIED BY AN ORANGE BACKGROUND AND BLACK LETTERING.

DANGER

DANGER: THE WORD "DANGER" INDICATES AN IMMINENTLY HAZARDOUS SITUATION WHICH, IF NOT AVOIDED, WILL RESULT IN SERIOUS INJURY OR DEATH. THIS SIGNAL WORD IS LIMITED TO THE MOST EXTREME SITUATIONS. IT IS IDENTIFIED BY A RED BACKGROUND AND WHITE LETTERING.

NOTICE

NOTICE: THE WORD "NOTICE" IS USED TO WARN THE OPERATOR OF POTENTIAL MACHINE DAMAGE IF A CERTAIN PROCEDURE IS NOT FOLLOWED. IT IS IDENTIFIED BY A BLUE BACKGROUND AND WHITE LETTERING.

IT IS YOUR RESPONSIBILITY TO READ ALL SECTIONS OF THIS MANUAL BEFORE OPERATING YOUR AG-BAGGER®!

Index

IT IS YOUR RESPONSIBILITY TO READ ALL SECTIONS OF THIS MANUAL BEFORE OPERATING YOUR AG-BAGGER®!

Be a Safe Operator

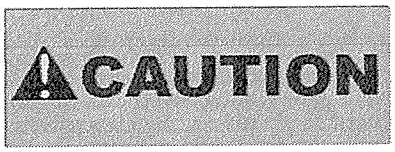

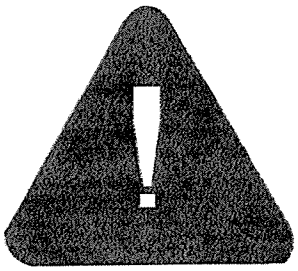

By thinking before acting and reading your operators manual you will be a **Safe Operator.**

Avoid Accidents, most accidents, whether they occur in industry, on the farm, at home, or on the highway, are caused by the failure of some individual to follow simple and fundamental safety rules or precautions. For this reason most accidents can be prevented by recognizing the real cause and doing something about it before the accident occurs.

Regardless of the care used in the design and construction of any type of equipment, there are many conditions that cannot be completely safeguarded against without interfering with reasonable accessibility and efficient operation. A careful operator is the best insurance against an accident.

Table of Contents

STOP MACHINE AND TURN OFF ENGINE TO ADJUST, LUBRICATE, OR SERVICE.

TAKE NOTE! THIS SAFETY ALERT SYMBOL FOUND THROUGHOUT THIS MANUAL IS USED TO CALL YOUR ATTENTION TO INSTRUCTIONS INVOLVING YOUR PERSONAL SAFETY AND THE SAFETY OF OTHERS. FAILURE TO FOLLOW THESE INSTRUCTIONS CAN RESULT IN INJURY OR DEATH.

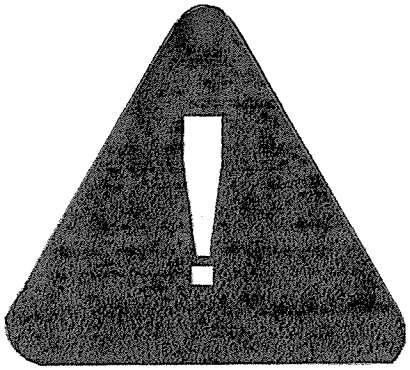

THIS SYMBOL MEANS

ATTENTION

BECOME ALERT

YOUR SAFETY IS INVOLVED!

SIGNAL WORDS

Note the use of the signal words DANGER, WARNING and CAUTION with the safety messages. The appropriate signal word for each has been selected using the following guidelines:

⚠ WARNING Indicates a potentially hazardous situation that, if not avoided, could result in death or serious injury, and includes hazards that are exposed when guard are removed. It may also be used to alert against unsafe practices

⚠ DANGER Indicates imminently hazardous situation that, if not avoided, will result in death or serious injury. This signal word is to be limited to the most extreme situations typically for machine components that, for functional purposes, cannot be guarded.

⚠ CAUTION Indicates a potentially hazardous situation that, if not avoided, may result in minor or moderate injury. It may also be used to alert against unsafe practices.

If you have questions not answered in this manual, or require additional copies, or the manual is damaged, please contact your Ag-Bag® Dealer or Miller-St.Nazianz Inc. 511 East Main PO Box 127 St.Nazianz, WI 54232. (Telephone) 920-773-2121. (FAX) 920-773-1200.

STOP MACHINE AND TURN OFF ENGINE TO ADJUST, LUBRICATE, OR SERVICE.

EQUIPMENT SAFETY GUIDELINES

Safety of the operator is one of the main concerns in designing and developing a new piece of equipment. Designers and manufacturers build in as many safety features as possible. However, every year many accidents occur which could have been avoided by a few seconds of thought and a more careful approach to handling equipment. You, the operator, can avoid many accidents by observing the following precautions in this section. To avoid personal injury, study the following precautions and insist those working with you or for you follow them.

In order to provide a better view, certain photographs or illustrations in this manual may show an assembly with a safety shield removed. However, equipment should never be operated in this condition. Keep all shields in place. If shield removal becomes necessary for repairs, replace the shield prior to use.

Replace any CAUTION, WARNING, DANGER or NOTICE label that is not readable or is missing.

Do not attempt to operate this equipment under the influence of drugs or alcohol.

Review the safety instructions with all users annually.

This equipment is dangerous to children and persons unfamiliar with its operation. The operator should be a responsible adult familiar with farm machinery and trained in this equipment's operation. **Do not allow persons to operate or assemble this unit until they have read this manual and have developed a through understanding of the safety precautions and how it works.**

Do not paint over, remove or deface any safety signs or warning labels on your equipment. Observe all safety signs and practice the instructions on them.

Never exceed the limits of a piece of machinery. If its ability to do a job, or to do so safely, is in question - **DON'T TRY IT.**

LIGHTING AND MARKING

It is the responsibility of the operator to know the lighting and marking requirements of the local highway authorities and to install and maintain the equipment to provide compliance with the regulations. Add extra lights when transporting at night or during periods of limited visibility.

STOP MACHINE AND TURN OFF ENGINE TO ADJUST, LUBRICATE, OR SERVICE.

SAFETY SIGN CARE:

Keep safety signs clean and legible at all times.

- Replace safety signs that are missing or have become illegible
- Replaced parts that displayed a safety sign should also display the current sign.
- Safety signs are available from your authorized Ag-Bag® Dealer or Ag-Bag International, Ltd.

HOW TO INSTALL SAFETY SIGNS:

- Be sure that the installation area is clean and dry.
- Decide on the exact position before you remove the backing paper.
- Remove the smallest portion of the split backing paper.
- Align the decal over the specified area and carefully press the small portion with the exposed sticky backing in place.
- Slowly peel back the remaining paper and carefully smooth the remaining portion of the decal in place.
- Small air pockets can be pierced with a pin and smoothed out using the piece of decal backing paper.

TIRE SAFETY:

- Failure to follow proper procedures when mounting a tire on a wheel or rim can produce an explosion which may result in serious injury or death.
- Do not attempt to mount a tire unless you have the proper equipment and experience to do the job.
- Inflating or servicing tires can be dangerous. Whenever possible, trained personnel should be called to service and/or mount tires.
- Always order and install tires and wheels with appropriate capacity to meet or exceed the anticipated weight to be placed on the equipment.

STOP MACHINE AND TURN OFF ENGINE TO ADJUST, LUBRICATE, OR SERVICE.

REMEMBER:

Your best assurance against accidents is a careful and responsible operator. If there is any portion of this manual or function you do not understand, contact your local authorized Ag-Bag® Dealer or Miller-St.Nazianz Inc.

BEFORE OPERATION:

- Carefully study and understand this manual.
- Do not wear loose-fitting clothing which may catch in moving parts.
- Always wear protective clothing and substantial shoes.
- It is recommended that suitable protective hearing and (eye protection) sight protectors be worn.
- Keep wheel lug nuts or bolts tightened to specified torque.
- Assure that agricultural implement tires are inflated evenly.
- Give the unit a visual inspection for any loose bolts, worn parts or cracked welds, and make necessary repairs. Follow the maintenance safety instructions included in this manual.
- Be sure that there are no tools lying on or in the equipment.
- Do not use the unit until you are sure that the area is clear, especially children and animals.
- Don't hurry the learning process or take the unit for granted. Ease into it and become familiar with your new equipment.
- Practice operation of your equipment and its attachments. Completely familiarize yourself and other operators with its operation before using.
- Move tractor to the widest recommended settings to increase stability.
- Securely attach to towing unit. Use a high strength, appropriately sized hitch pin with a mechanical retainer and attach safety chain.
- Do not allow anyone to stand between the tongue or hitch and the towing vehicle when backing up to the equipment.

STOP MACHINE AND TURN OFF ENGINE TO ADJUST, LUBRICATE, OR SERVICE.

DURING OPERATION:

- SAFETY CHAIN - if equipment is going to be transported on a public highway, a safety chain should be obtained and installed. Always follow state and local regulations regarding a safety chain and auxiliary lighting when towing farm equipment on a public highway. Be sure to check with local law enforcement agencies for your own particular regulations. Only a safety chain (not and elastic or nylon/plastic tow strap) should be used to retain the connection between the towing and towed machine in the event of separation of the primary attaching system.

- Install the safety chain by crossing the chains under the tongue and secure to the draw bar cage or hitch or bumper frame.

- Beware of bystanders, **particularly children!** Always look around to make sure that it is safe to start the engine of the towing vehicle or move the unit. This is particularly import with higher noise levels and quiet cabs, as you may not hear people.

- **NO PASSENGERS ALLOWED** - Do not carry passengers anywhere on, or in, the tractor or equipment, except as required for operations.

- Keep hands and clothing clear of moving parts.

- Do not clean, lubricate or adjust your equipment while it is operating.

- When halting operation, even periodically, set the tractor or towing vehicle brakes, disengage the PTO, shut off the engine and **remove the ignition key.**

- Pick the levelest possible route when transporting across fields. Avoid the edges of ditches or gullies and steep hillsides.

- Maneuver the tractor or towing vehicle at safe speeds.

- Avoid overhead wires or other obstacles. Contact with overhead lines could cause serious injury or death.

- Allow for unit length when making turns.

- Do not walk or work under raised components or attachments unless securely positioned and blocked.

- Keep all bystanders, pets and livestock clear of the work area.

STOP MACHINE AND TURN OFF ENGINE TO ADJUST, LUBRICATE, OR SERVICE.

FOLLOWING OPERATION:

- Following operation, or when unhitching, stop the tractor, set the brakes, disengage the PTO and all power drives, shut off the engine and **remove the ignition keys.**

- Store the unit in an area away from human activity.

- Do not permit children to play on or around the stored unit.

- Make sure all parked machines are on a hard, level surface and engage all safety devices.

- Wheel chocks may be needed to prevent unit from rolling.

HIGHWAY AND TRANSPORT OPERATIONS:

- Adopt safe driving practices:

- Keep the brake pedal latched together at all times. **NEVER USE INDEPENDENT BRAKING WITH MACHINE IN TOW AS LOSS OF CONTROL AND/OR UPSET OF UNIT CAN RESULT.**

- Always drive at a safe speed relative to local conditions and ensure that your speed is low enough for an emergency stop to be safe and secure. Keep speed to a minimum.

- Reduce speed prior to turns to avoid the risk of overturning.

- Avoid sudden uphill turns on steep slopes.

- Always keep the tractor in gear to provide engine braking when going downhill. Do not coast.

- Do not drink and drive!

- Comply with state and local laws governing highway safety and movement of farm machinery on public roads.

- Use approved accessory lighting, flags, and necessary warning devices to protect operators of other vehicles on the highway during daylight and nighttime transport. Various safety light and devices are available from you Ag-Bag® Dealer.

STOP MACHINE AND TURN OFF ENGINE TO ADJUST, LUBRICATE, OR SERVICE.

- The use of a flashing amber light is acceptable in most localities. However, some localities prohibit their use. Local laws should be checked for all highway lighting and marking requirements.

- When driving the tractor and equipment on the road or highway at night or during the day, use flashing amber warning lights and a slow moving vehicle (SMV) identification emblem.

- Plan your route to avoid heavy traffic.

- Be a safe and courteous driver. Always yield to oncoming traffic in all situations, including narrow bridges, intersections, etc.

- Be observant of bridge loading ratings. Do not cross bridges rated lower than the gross weight at which you are operating.

- Watch for obstructions overhead and to the side while transporting.

- Always operate equipment in a position to provide maximum visibility at all times. Make allowances for increased length and weight of the equipment when making turns, stopping the unit, etc.

PERFORMING MAINTENANCE:

- Good maintenance is your responsibility. Poor maintenance is an invitation to trouble.

- Make sure there is plenty of ventilation. Never operate the engine of the towing vehicle in a closed building. The exhaust fumes may cause asphyxiation.

- Before working on this machine, stop the towing vehicle, set the brakes, disengage the PTO and all power drivers, shut off the engine and **remove the ignition keys.**

- Be certain all moving parts on the machine have come to a complete stop before attempting to perform maintenance.

- **Always** use a safety support and block the wheels. Never use a jack to support the machine.

- Always use the proper tools or equipment for the job at hand.

- Use extreme caution when making adjustments.

- Follow the torque chart in this manual when tightening bolts and nuts.

STOP MACHINE AND TURN OFF ENGINE TO ADJUST, LUBRICATE, OR SERVICE.

- Never use your hands to locate a hydraulic leak on attachments. Use a small piece of cardboard or wood. Hydraulic fluid escaping under pressure can penetrate the skin.

- When disconnecting hydraulic lines. Shut off hydraulic supply and relieve all hydraulic pressure.

- Openings in the skin and minor cuts are susceptible to infection from hydraulic fluid. **If injured by escaping hydraulic fluid, see a doctor at once. Gangrene can result. Without immediate medical treatment, serious infection and reactions can occur.**

- Replace **all shields and guards** after servicing and before moving.

- After servicing, be sure all tools, parts and service equipment are removed.

- Do not allow grease or oil to build up on any step or platform.

- Never replace hex bolts with less than grade five bolts unless otherwise specified. Refer to bolt torque chart for head identification marking.

- Where replacement parts are necessary for periodic maintenance and servicing, genuine factory replacement parts must be used to restore your equipment to original specifications. Ag-Bag International will not claim responsibility for use of unapproved parts and/or accessories and other damages as a result of their use.

- If equipment has been altered in any way from original design, Miller-St.Nazianz Inc. does not accept any liability for injury or warranty.

- A fire extinguisher and first aid kit should be kept readily accessible while performing maintenance on this equipment.

STOP MACHINE AND TURN OFF ENGINE TO ADJUST, LUBRICATE, OR SERVICE.

This section of the manual presents the Labels used on the Ag-Bagger®. Also presented are other information that you should know in order to operate the Ag-Bagger® in a safe manner. Unless otherwise noted the decals shown are the actual decals used on the machine.

DANGER LABELS

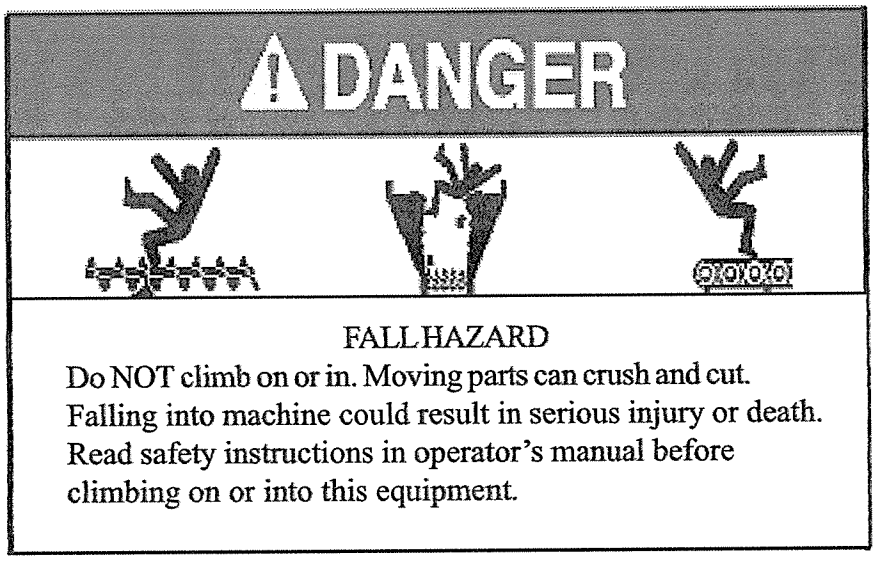

FALL HAZARD. Never climb on or into the Ag-Bagger® unless the tractor has been completely shut down. If you are going into the hopper area, to prevent any possibility of injury the PTO shaft should be disconnected from the tractor. Climbing onto the conveyor should never be done. Any item needing to be cleared from this area can be done from the outside. Never allow anyone to ride or sit on the Ag-Bagger® at anytime. Children should not be allowed near the Ag-Bagger® when it is in operation. To replace this decal reorder part number 1530015 from your Ag-Bag® Dealer.

STOP MACHINE AND TURN OFF ENGINE TO ADJUST, LUBRICATE, OR SERVICE.

WARNING LABELS

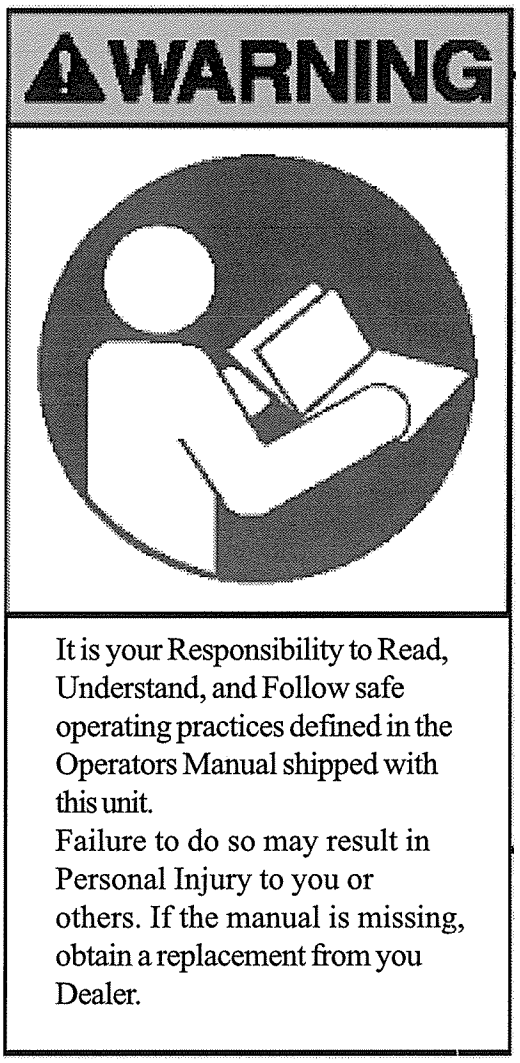

YOUR RESPONSIBILITY. As indicated on the label, it is the responsibility of the operator for the safe operation of the Ag-Bagger®. Make sure that anyone who will operate or work around the Ag-Bagger® has read and understands the information that is provided in this Operator's Manual. To replace this decal reorder part number 1530069 from your Ag-Bag® Dealer.

STOP MACHINE AND TURN OFF ENGINE TO ADJUST, LUBRICATE, OR SERVICE.

WARNING LABELS (CONT.)

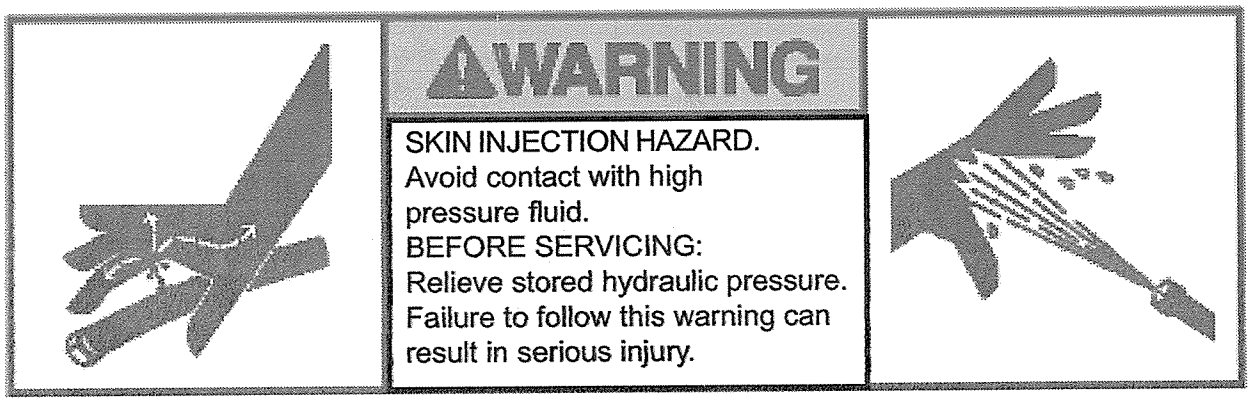

SKIN INJECTION HAZARD. Hydraulic oils and fluid under high pressure can be injected under the skin. The oil/fluid can cause serious illness. Always shut down the tractor and relieve all stored pressure on the hoses before servicing. Never run your hand over a hydraulic hose you suspect has a leak. To replace this decal reorder part number 1530127 from your Ag-Bag® Dealer.

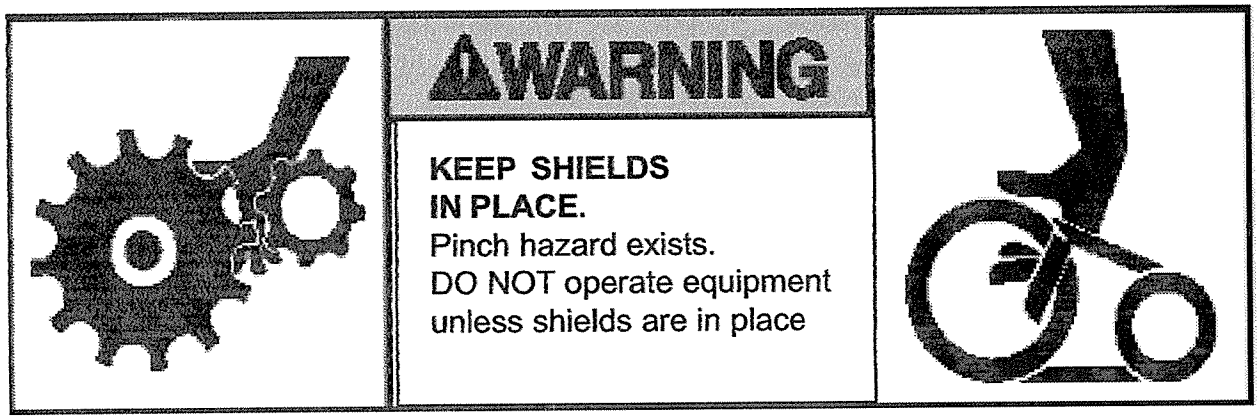

KEEP SHIELDS IN PLACE. There are numerous shields located on the Ag-Bagger®. They are placed to keep the operator safe from serious injury. Never remove a shield while the Ag-Bagger® is in operation. Make sure the tractor has been shut off before removing any shield, and that the shield has been replaced before operation resumes. To replace this decal reorder part number 1530038 from your Ag-Bag® Dealer.

STOP MACHINE AND TURN OFF ENGINE TO ADJUST, LUBRICATE, OR SERVICE.

WARNING LABELS (CONT.)

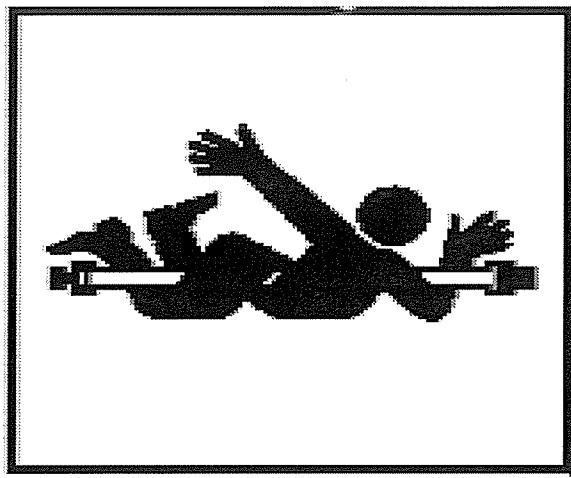

WARNING

ROTATING DRIVELINE
KEEP AWAY.
KEEP SHIELD IN PLACE
U-joint yokes must be locked in place.
Adjust tractor or drawbar and implement hitch to proper dimensions.
Keep tractor master shield, PTO guard, and implement guards in place.

ROTATING DRIVELINE. The PTO shaft is an important part in the operation of the Ag-Bagger®. It turns at a high rate of speed and the manufacturer has affixed a Danger Decal on it warning of the possibility of serious injury or death. The reason for this Warning Decal is to let you know that you should make sure that all shields are in place anytime the PTO shaft is in operation. If you are going to remove a PTO shield make sure the tractor power is off. It is important to maintain the PTO shaft on a regular basis. See the Service and Maintenance portion of the Operator's Manual for instructions. To replace this decal reorder part number 1530059 from your Ag-Bag® Dealer.

CAUTION LABELS

CHECK LUG NUTS. Because the Ag-Bagger® may be towed on a public highway, you should check the lug nuts on a regular basis. Check the Service and Maintenance portion of the Operator's Manual for torque details. To replace this decal reorder part number 1530011 from your Ag-Bag® Dealer.

CAUTION

CHECK LUG NUTS.
Check Lug Nuts Regularly.
Consult Operator's Manual for torque specifications.

STOP MACHINE AND TURN OFF ENGINE TO ADJUST, LUBRICATE, OR SERVICE.

CAUTION LABELS (CONT.)

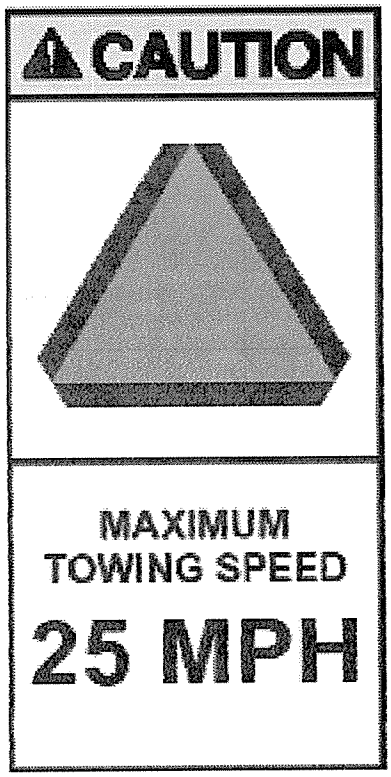

MAXIMUM TOWING SPEED. Although you can tow the Ag-Bagger® on the open highway do not exceed 25 mile per hour. It should be remembered that the Ag-Bagger® does not have brakes, and that the wheels and axles are not bolted to the frame but are held in place by a pin and hair pin. Under no circumstances should you tow the Ag-Bagger® while the wheels are in the bagging position. Make sure you read and understand the section on preparing the Ag-Bagger® for transit in the Operator's Manual. The PB6000 has its wheels fixed in place. This requires that it be towed in the bagging position and should be towed at a lower speed. To replace this decal reorder part number 1530041 from your Ag-Bag® Dealer.

NOTICE LABELS

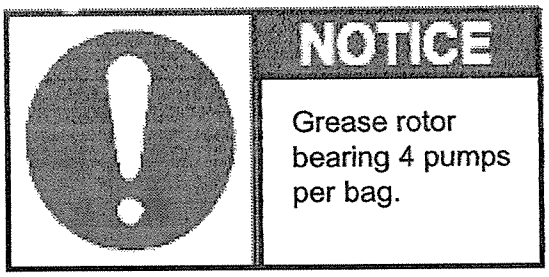

GREASE ROTOR BEARING. The Ag-Bagger® is equipped with two Rotor Bearing Grease Whips. The zerk fittings are located on the frame on either side of the tunnel. For the best results with your Ag-Bagger® use the type grease recommended in the Service and Maintenance portion of the Operator's Manual. To replace this decal reorder part number 1530096 from your Ag-Bag® Dealer.

STOP MACHINE AND TURN OFF ENGINE TO ADJUST, LUBRICATE, OR SERVICE.

NOTICE LABELS (CONT.)

HYDRAULIC OIL ONLY. The Operator's Manual makes recommendations for the correct viscosity of hydraulic oil to be used in your Ag-Bagger® hydraulic system. To keep your warranty valid use only the viscosity listed in the Service and Maintenance section of the Operator's Manual. To replace this decal reorder part number 1530028 from your Ag-Bag® Dealer.

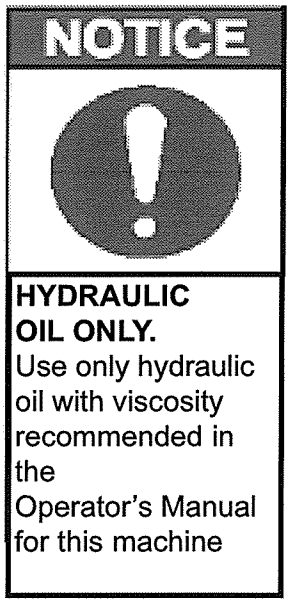

TRACTOR TO BE IN NEUTRAL. During the process of bagging the tractor is pushed forward as the bag fills. In order to minimize damage to the Ag-Bagger®, your tractor, and the correct compaction of the product being bagged, it is important the tractor be in neutral and all brakes be released before starting to bag. To replace this decal reorder part number 1530065 from your Ag-Bag® Dealer.

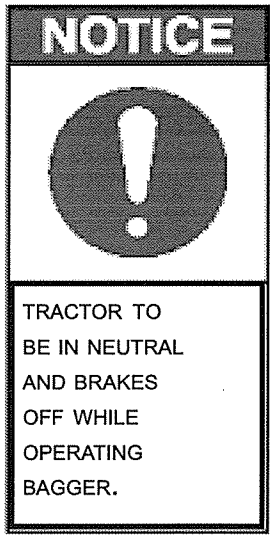

STOP MACHINE AND TURN OFF ENGINE TO ADJUST, LUBRICATE, OR SERVICE.

OTHER LABELS

OIL CHAIN. The double 120 chain is behind a safety shield located on the right side of the front of the Ag-Bagger®. Follow all safety procedures for removing the shield. To prevent excessive wear, oil the chain twice per bag. To replace this decal reorder part number 1530054 from your Ag-Bag® Dealer.

ENGLISH/SPANISH. The final decal currently in use on the Ag-Bagger® is an old style Warning Decal. It has both English and Spanish instructions. The decal is used mainly as a reminder. A simulation of the Decal is on the following page.

STOP MACHINE AND TURN OFF ENGINE TO ADJUST, LUBRICATE, OR SERVICE.

OTHER LABELS (CONT.)

WARNING
PRECACION

1. DO NOT reach or place any part of your body inside the hopper.
   NO TRATE de alcanzar o ponga ninguna parta del cuerpo adentro de la mezcladora.

2. DO NOT attempt to service, remove or unclog any material while machine is in operation.
   NO TRATE de reparar, remover, o destapar material cuando la maquina esta en operacion.

3. DO NOT climb or ride on machine during operation or transport.
   NO TREPE o monte la maquina cuando esta en operacion or transportando.

4. Make sure everyone is clear of machine BEFORE STARTING ENGINE OR ENGAGING POWER. KEEP CHILDREN AWAY AT ALL TIMES.
   Haga seguro que nadie este en o ALREDEDOR DE LA MAQUINA ANTES QUE EL MOTOR ARRANQUE, MANTEGA NINOS LEJOS DE LA MAQUINA.

5. DO NOT stand behind backstop net or near cables under tension.
   NO se pare detras de la malla o cerca de cables en tension.

6. STAY CLEAR of hoses under pressure.
   MANTENGASE LEJOS de las mangas a presion.

7. Keep all SHIELDS IN PLACE.
   Mantenga los ESCUDOS EN SU PROPIO LUGAR.

8. Keep HANDS, FEET AND CLOTHING AWAY FROM INTAKE AREA AND ALL OTHER MOVING PARTS OF MACHINE.
   Mantenga las MANOS, PIES, Y ROPA FUERA DEL AREADE ADMISION.

9. Think SAFETY AND USE CAUTION in entire operation area.
   SEA PRECAVIDOY SEA CUIDADOSO en la area de operacion.

STOP MACHINE AND TURN OFF ENGINE TO ADJUST, LUBRICATE, OR SERVICE.

INFORMATION SIGNS

TRANSPORT SAFETY. These signs are provided for information purposes only. They do not appear on the Ag-Bagger®, but instead they are used as part of this manual in providing information of a safety nature.

WARNING

Transport Safety

1 Make sure you are in compliance with all local regulations regarding transporting equipment on public roads and highways.

2 Make sure the slow moving vehicle emblem and all the lights and reflectors that are required by the local highway and transport authorities are in place, and clean and can be seen clearly by all overtaking and oncoming traffic.

3 Attach securely to the towing vehicle using a retainer on the tow hitch pin and a safety chain.

4 Do not allow anyone to ride on the Ag-Bagger® or towing vehicle during transport.

5 Stay away from over head obstructions and power lines. Electrocution can occur without direct contact.

6 Always use hazard warning flashers on towing vehicle when transporting unless prohibited by law.

7 Add extra lights or use pilot vehicles when transporting during times of limited visibility.

8 Secure all components and accessories before transporting.

STOP MACHINE AND TURN OFF ENGINE TO ADJUST, LUBRICATE, OR SERVICE.

INFORMATION SIGNS (CONT.)

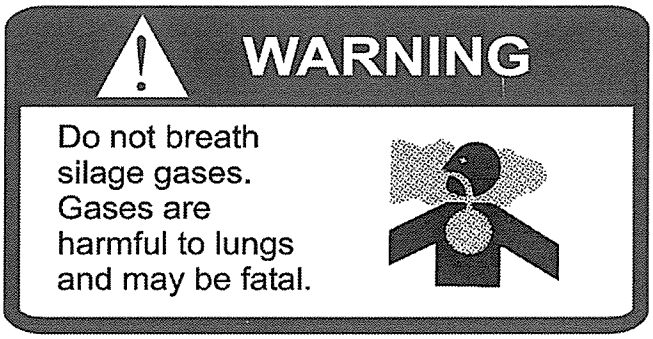

SILAGE GASES - The ensiling process inside the bag may produce gases. Do not breath gases expelled from the bag. These gases may contain various forms of nitric fumes that can be harmful to your lungs. If enough fumes are inhaled they can be fatal.

NOISE - Long-term exposure to loud noise can impair and cause loss of hearing. Use hearing protection.

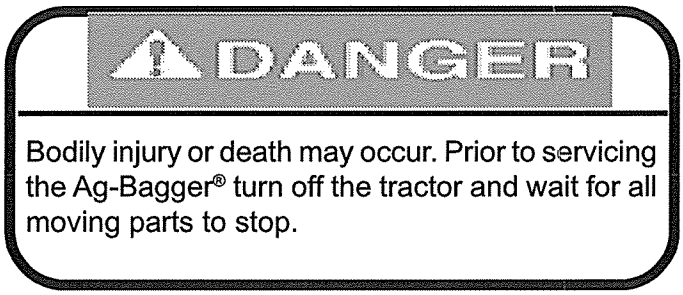

SERVICING THE AG-BAGGER® - Do not attempt to perform service or maintenance to the Ag-Bagger® or PTO shaft unless the tractor has been turned off and all moving parts have stopped.

STOP MACHINE AND TURN OFF ENGINE TO ADJUST, LUBRICATE, OR SERVICE.

Index

L

S

STOP MACHINE AND TURN OFF ENGINE TO ADJUST, LUBRICATE, OR SERVICE.

The machine overview section shows and identifies the location of many of the commonly used features of the Ag-Bagger®. The pictures should be used as a reference to quickly locate the different options and features of your Ag-Bagger®. Also, the terms Front, Rear, Right-Side, and Left-Side are used elsewhere in this manual for your convenience.

Table of Contents

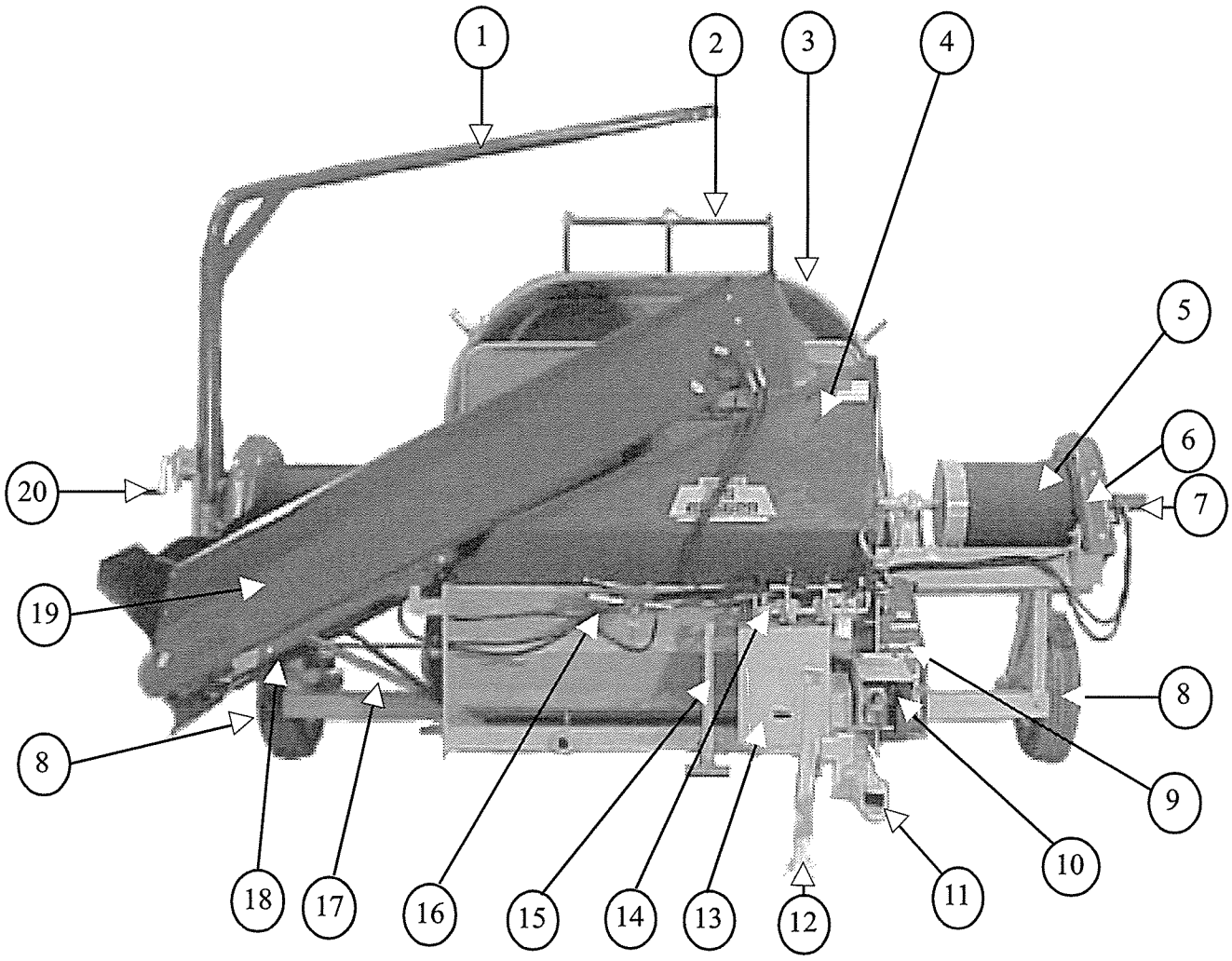

MACHINE - FRONT

1. BAG BOOM
2. BAG CRADLE
3. INTERCHANGEABLE TUNNEL HOOD
4. HOPPER
5. CABLE DRUM AND CABLE
6. CABLE DRUM DISC AND BRAKE ASSEMBLY
7. HYDRAULIC CABLE REWIND
8. WHEEL AND AXLE ASSEMBLY – BAGGING POSITION
9. CHAIN DRIVE AND SPROCKET COVER
10. GEAR BOX
11. TOW HITCH
12. LIFT JACK
13. HYDRAULIC TANK AND PUMP
14. HYDRAULIC CONTROL LEVERS
15. JACK STAND
16. HYDRAULIC HAND PUMP
17. CONVEYOR HEIGHT ADJUSTER
18. HYDRAULIC CONVEYOR LIFT
19. CONVEYOR
20. BAG BOOM WINCH

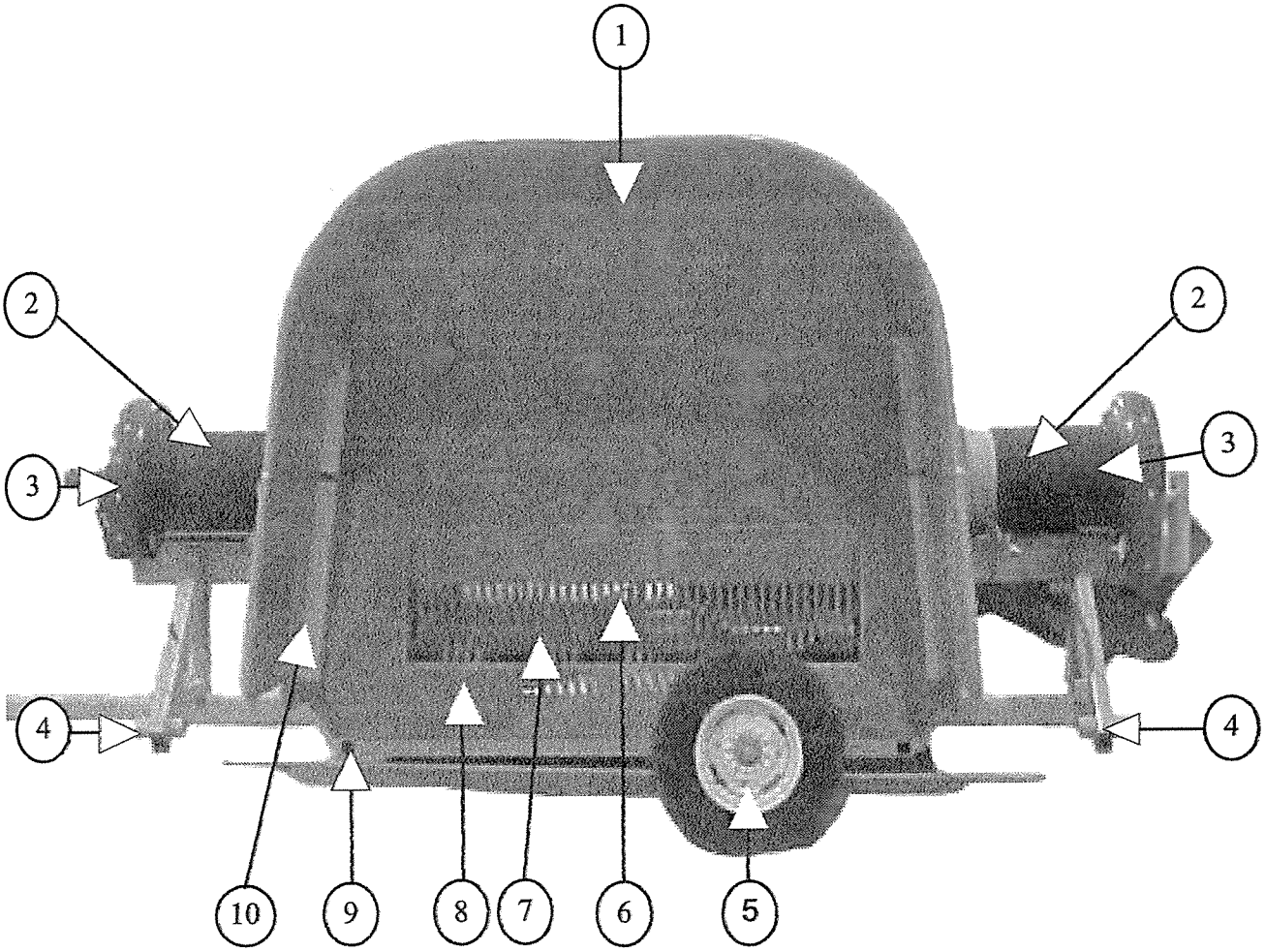

MACHINE - REAR

1. INTERCHANGEABLE TUNNEL HOOD
2. CABLE DRUM AND CABLE
3. CABLE DRUM DISC AND BRAKE ASSEMBLY
4. WHEEL AXLE RECEIVE – BAGGING POSITION
5. WHEEL AND AXLE ASSEMBLY – TOW POSITION
6. STRIPPER BAR
7. ROTOR AND ROTOR TEETH
8. TUNNEL FLOOR
9. BAG PAN
10. TUNNEL SUB-FRAME

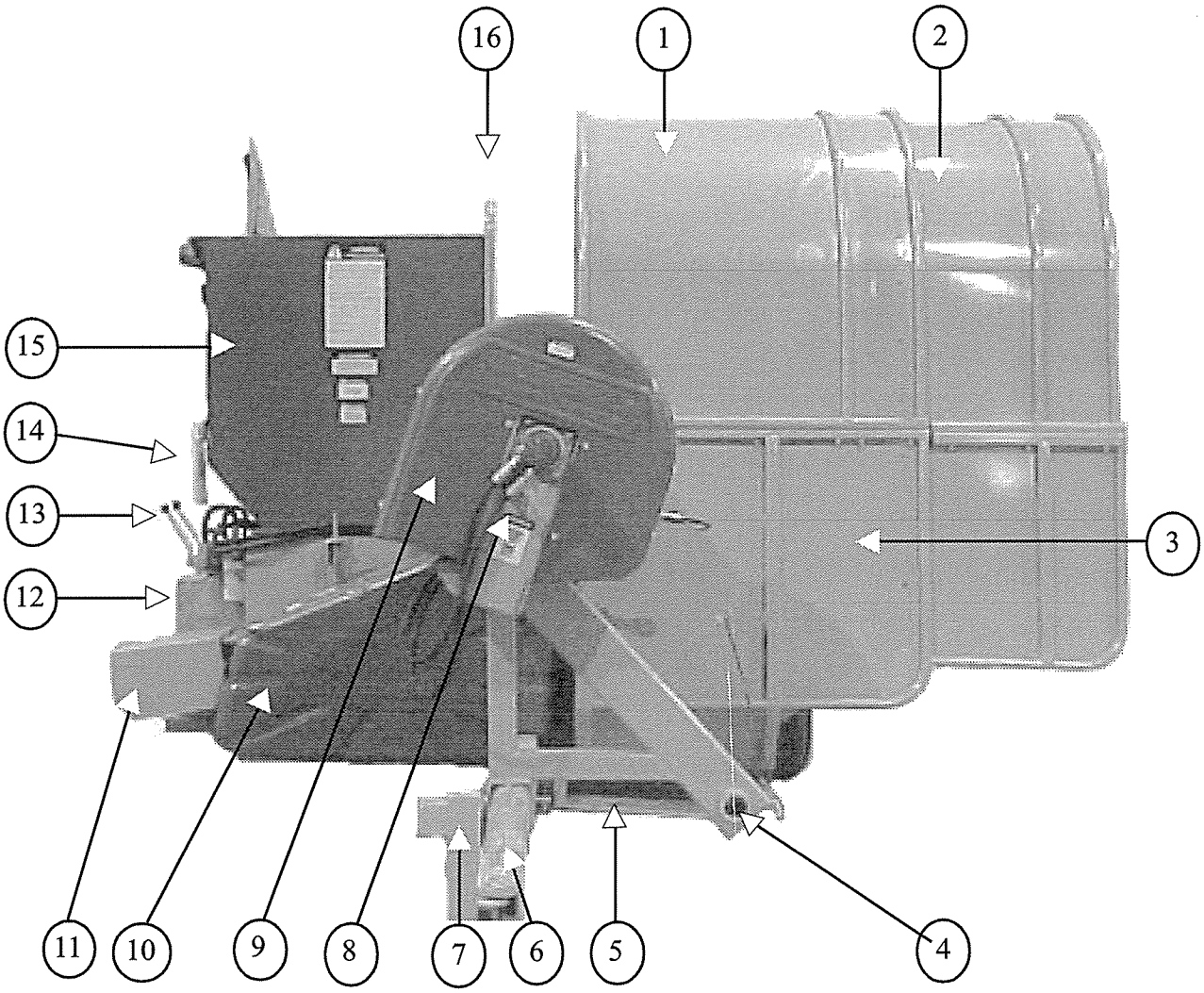

MACHINE - RIGHT SIDE

1. INTERCHANGEABLE TUNNEL HOOD
2. TUNNEL EXTENSION
3. TUNNEL SUB-FRAME
4. WHEEL AXLE RECEIVER – BAGGING POSITION
5. BAG PAN
6. TOW HITCH
7. LIFT JACK
8. HYDRAULIC CABLE REWIND MOTOR
9. CABLE DRUM DISC AND BRAKE ASSEMBLY
10. DOUBLE 120 CHAIN AND SPROCKET COVER
11. PTO SHAFT COUPLER COVER
12. HYDRAULIC TANK AND PUMP
13. HYDRAULIC CONTROL LEVERS
14. PTO SHAFT TRANSPORT LOCK
15. HOPPER
16. FACE PLATE

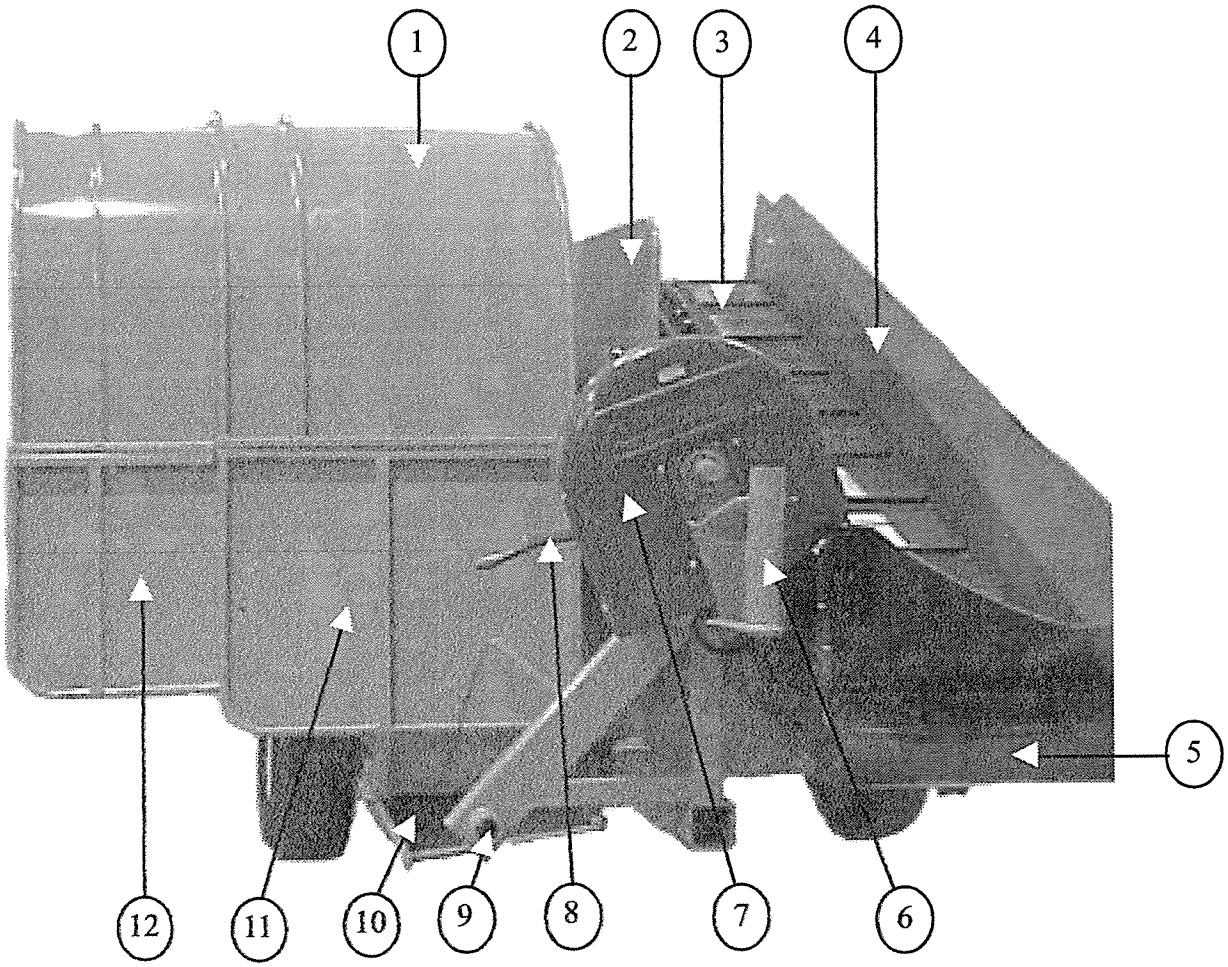

MACHINE - LEFT SIDE

1. INTERCHANGEABLE TUNNEL HOOD
2. FACE PLATE
3. CONVEYOR CHAIN AND SLATS
4. CONVEYOR
5. CONVEYOR CLEAN-OUT DOOR
6. BAG BOOM RECEIVER
7. CABLE DISC AND BRAKE ASSEMBLY
8. CABLE GUIDE
9. WHEEL AXLE RECEIVER – BAGGING POSITION
10. BAG PAN
11. TUNNEL SUB-FRAME
12. TUNNEL EXTENSION

Index

Ag-Bagger® Models

G6060A G6060B G6060C
G6070B G6070C
PB6000

Bag Boom & Cradle

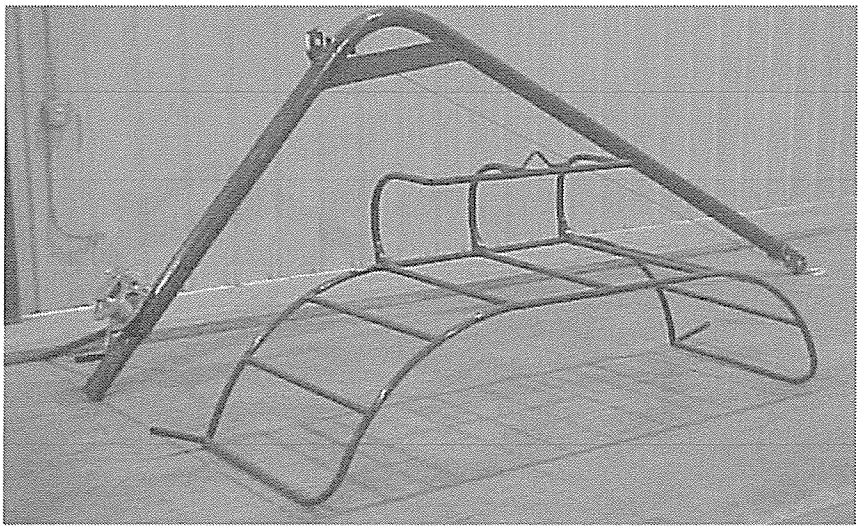

Use the bag boom and cradle for easy bag installation. The maximum lift capacity of the bag boom is 500 pounds.

Standard: G6060C and G6070C

Optional: PB6000, G6060B and G6070B

Not Available: G6060A

Interchangeable Tunnel Hood

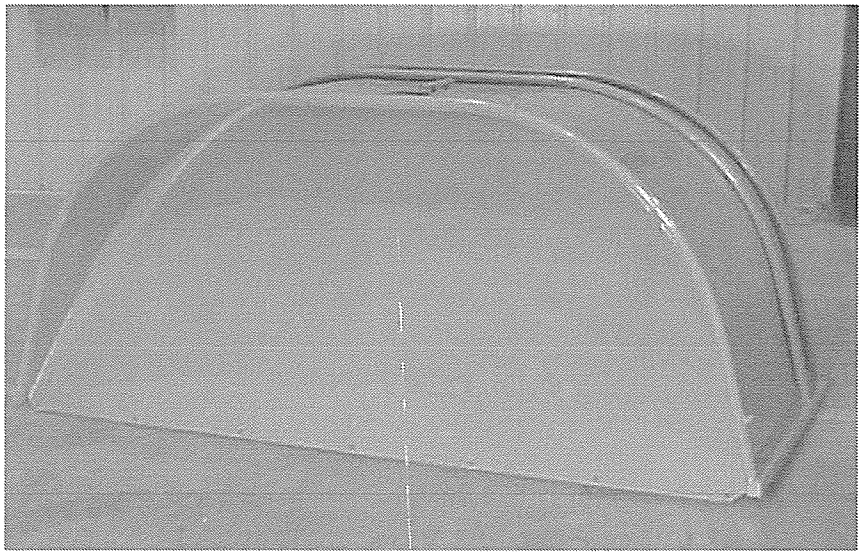

Use the Interchangeable Tunnel Hood for more flexibility. The interchangeable hood comes in 8, 9, and 10 foot sizes and is easily replaced.
8 foot: G6060A, G6060B, and G6060C
9 foot: G6060A, G6060B, G6060C, G6070B, and G6070C
10 foot: G6070B and G6070C
PB6000 does not come with interchangeable tunnels

Tunnel Extension

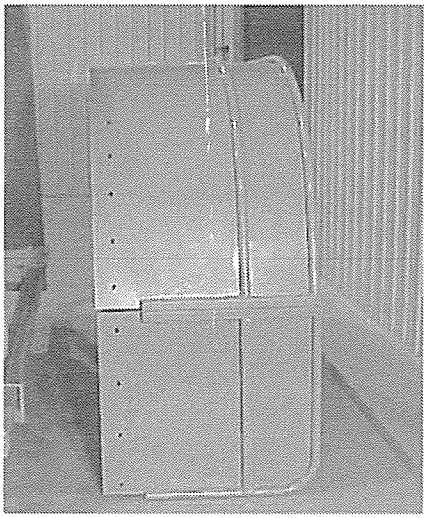

The extension is used to assure better compaction and a smoother bag. You may get the extension in 12 and 24 inch sizes.

Optional: G6060A, G6060B, and G6060C

Standard: G6070B AND G6070C

Not Available: PB6000

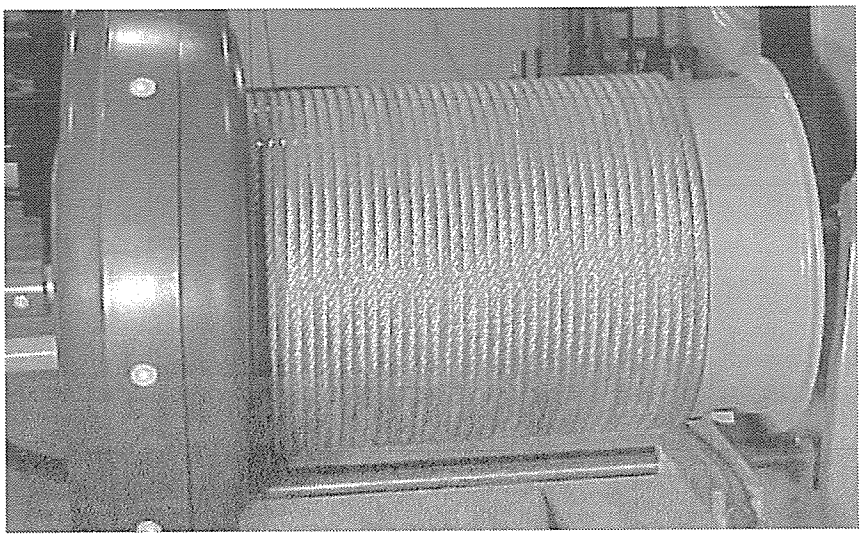

Cable Drum and Cables

The Cables are used in the bagging operation and maintain constant pressure to enable correct compaction and a straight bag. The Cable Drum holds the cable and allows brake pressure to be applied. The cable is attached to the backstop. Cables come in two sizes 200 feet and 250 feet.

200 feet: G6060A, G6060B, AND G6060C

250 feet: G6070B AND G6070C

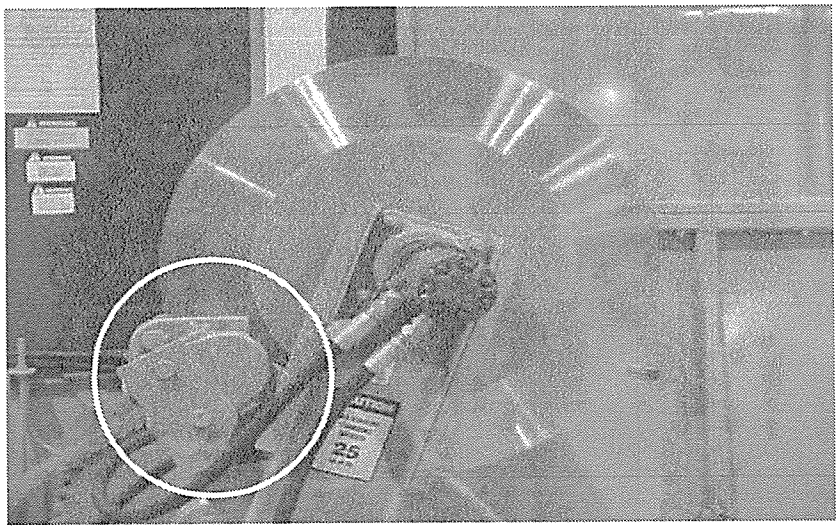

Single or Double Disc Brakes

Using the highest quality components the Disc Brakes are used to control compaction making sure your feed is of the highest quality. (Shown with Hydraulic Cable Rewind)

Single Disc Brakes: G6060A, G6060B, and G6060C

Double Disc Brakes: G6070B and G6070C

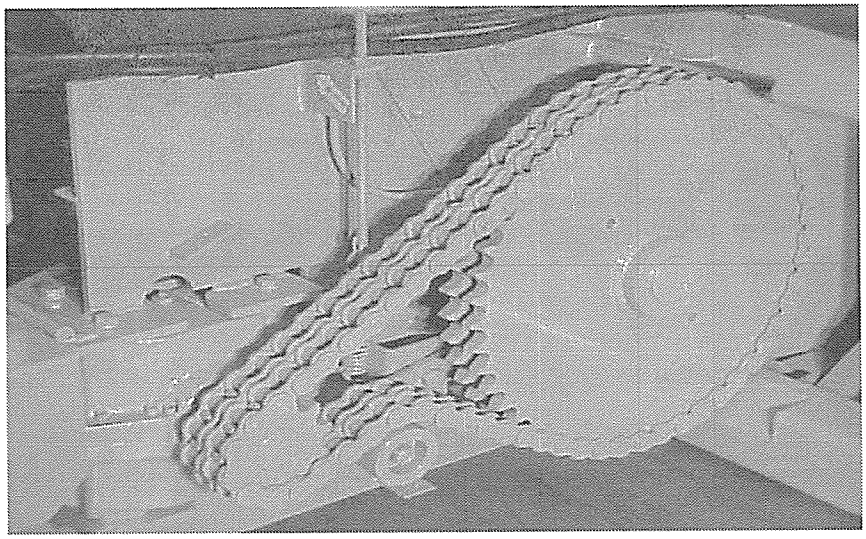

Double 120 Rotor Drive Chain

Designed for durability Ag-Bag uses Double 120 Chain on all Ag-Baggers®. By following the maintenance schedule your Bagger should give you many years of worry free service.

The Double 120 Rotor Drive Chain is standard on all 6000 series Ag-Baggers®.

Cross Conveyor

The conveyor moves product from the delivery vehicle to the hopper of the Ag-Bagger®.

The conveyor is hydraulic driven, operating either from your tractor's hydraulics or a self contained hydraulic package option.

The standard cross conveyor can easily be adjusted to distribute product evenly into the hopper.

Standard: PB6000, G6060A, G6060B, and G6060C

Optional: G6070B and G6070C

The Split Chain Cross Conveyor is designed for a more even distribution of product in the hopper with less adjusting.

Standard: G6070B and G6070C

Optional: G6060A, G6060B, and G6060C

Not Available: PB6000

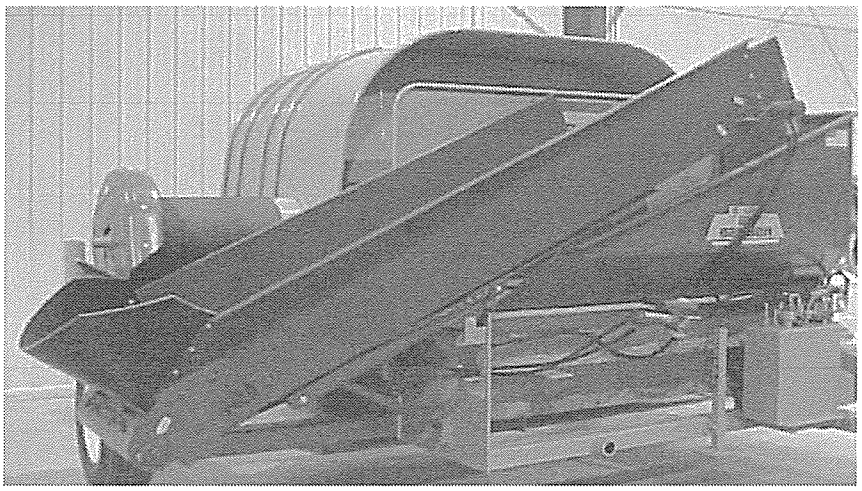

Cross Conveyor

Standard Model

Split Chain Model

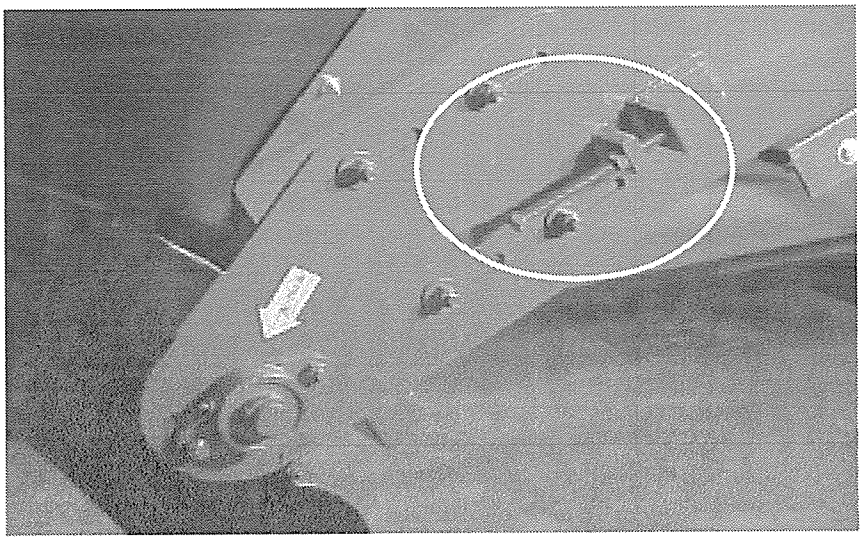

Conveyor Chain Adjuster

The lower end of the conveyor will adjust to maintain correct chain tension

Standard: All models

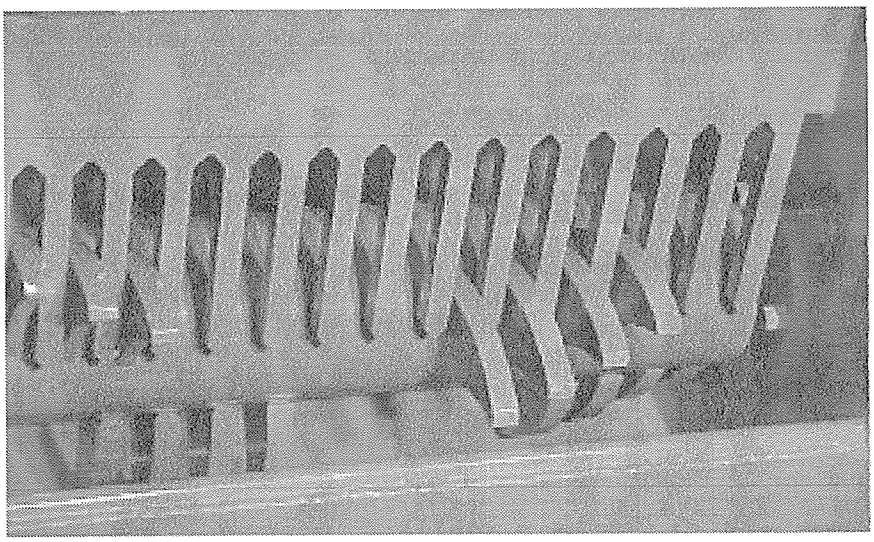

Rotor and Stripper Bar

At the heart of the Ag-Bag® bagging system are the patented rotor and stripper bar.

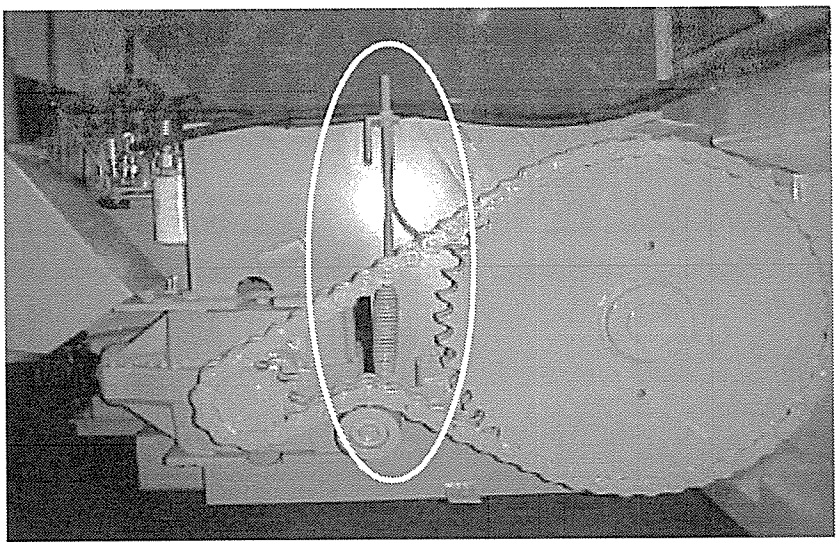

Chain Tension Adjuster

Used for adjusting the tension on the Double 120 chain. The spring loaded tension adjustor is standard on all Ag-Baggers®. Instructions for use are in the Service and Maintenance section of this manual.

540 PTO Shaft

The 6000 Series Ag-Bagger® rotor and hydraulics are driven by the tractor's power takeoff (PTO). The PTO shaft transmits power from the tractor PTO to the Ag-Bagger®. The rotor engages when the PTO and the PTO shaft start rotating. The PTO is protected from damage by a shear pin. Also pictured is the tractor end coupling and a PTO locking chain used to lock the PTO shaft of the Ag-Bagger® during transport or whenever you might need to disconnect the shaft from the tractor.

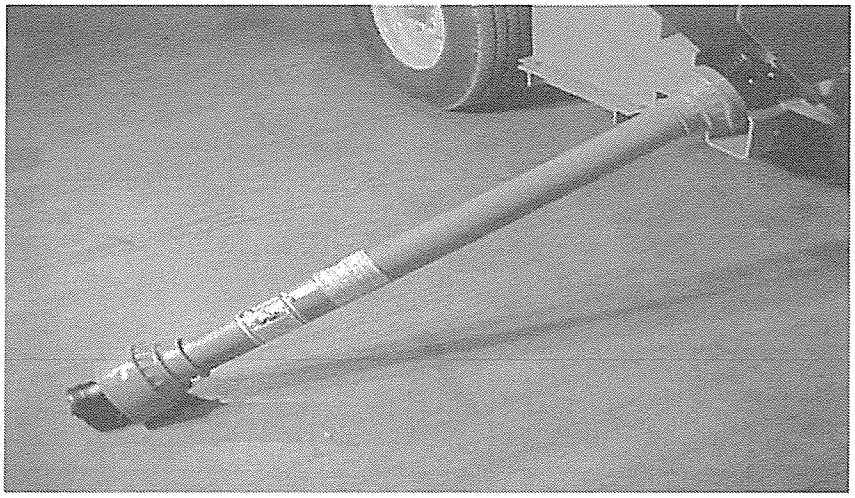

540 PTO Shaft

1000 PTO Shaft

The G6070 Planatray Ag-Bagger® is equiped with a 1000 RPM PTO shatt

PTO Coupler Bagger End

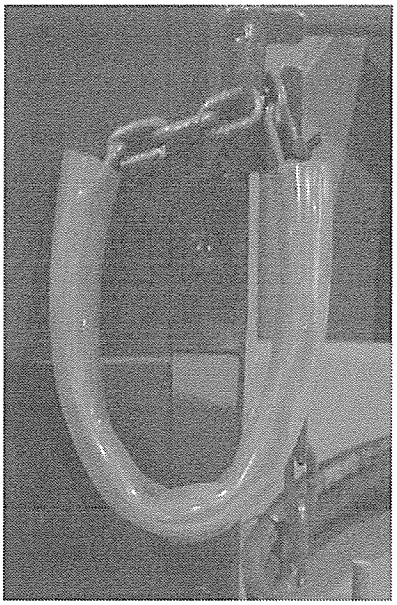

PTO Locking Chain

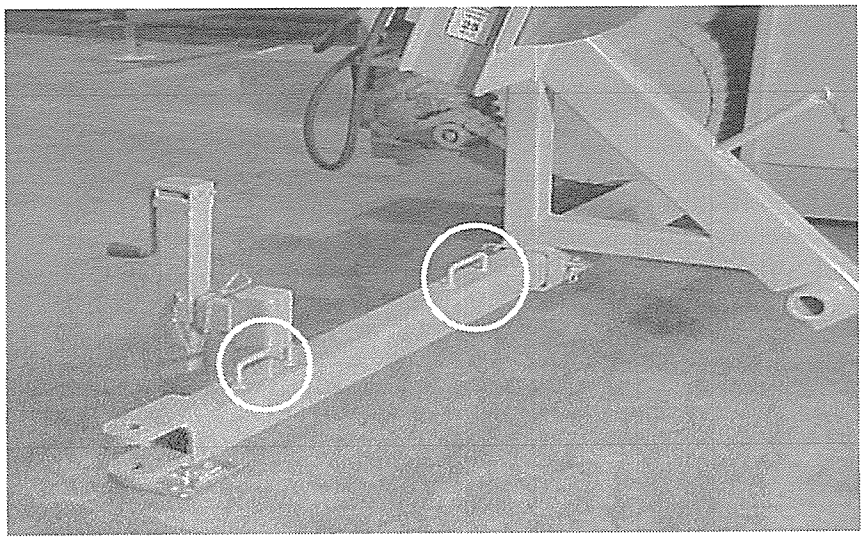

Tow Hitch

The tow hitch is equipped with handles so it can easily be moved between bagging and towing positions.

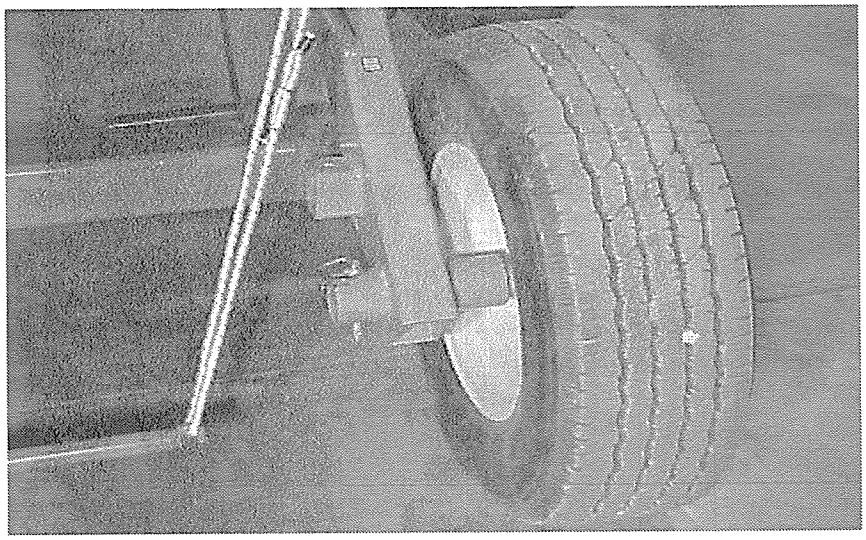

Tires / Rims / Axles

Quality tires and rims are used to assure you of satisfaction while bagging or towing your Ag-Bagger® from site to site. Shown here in the bagging position **Standard 9.5L 15 Farm Imp Tires:** PB6000

Standard 235/85R16 Tires: G6060A, G6060B, and G6060C

Standard 265/75R16 Tires: G6070B and G6070C

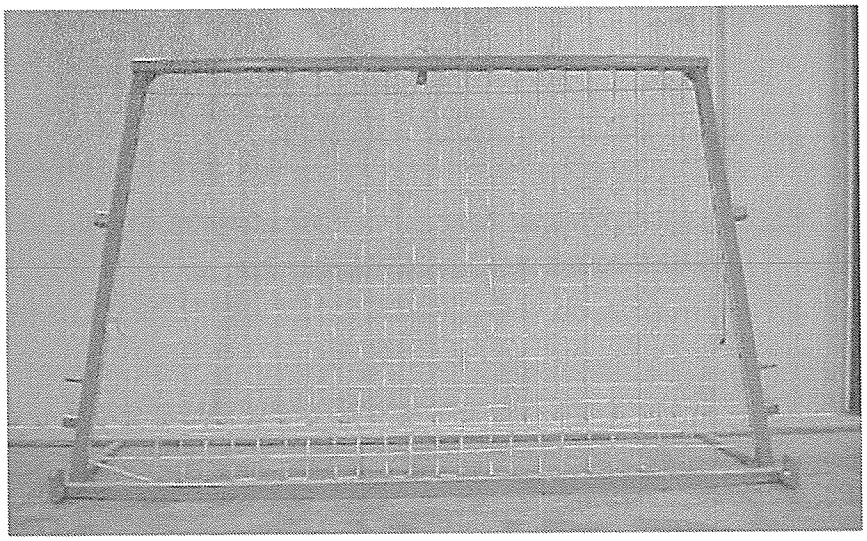

Backstop

Designed and constructed for rugged use the backstop is available in steel as well as aluminum. Steel is the standard issue for all models, while aluminum can be ordered as an option. All rope is provided with macine purchase.

Self-Contained Hydraulic Package

Consisting of a hydraulic tank, pump, hose, fittings and flow control valve. This package is designed to make you work more efficiently. Tractor hydraulics are not longer required.

Standard: G6060B, G6060C, G6070B, and G6070C

Not Available: PB6000 and G6060A

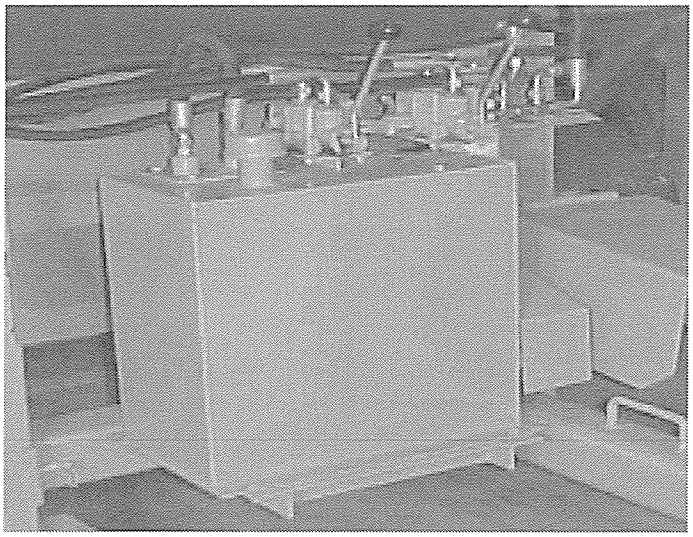

Hydraulic Cable Rewind

The valve located on the hydraulic tank controls the hydraulic cable rewind. Push the valve handle forward to engage the cable rewind. Move the valve handle back to neutral to stop the cable rewind.
Standard: G6060C and G6070C
Optional: G6060B and G6070B
Not Available: PB6000 and G6060A

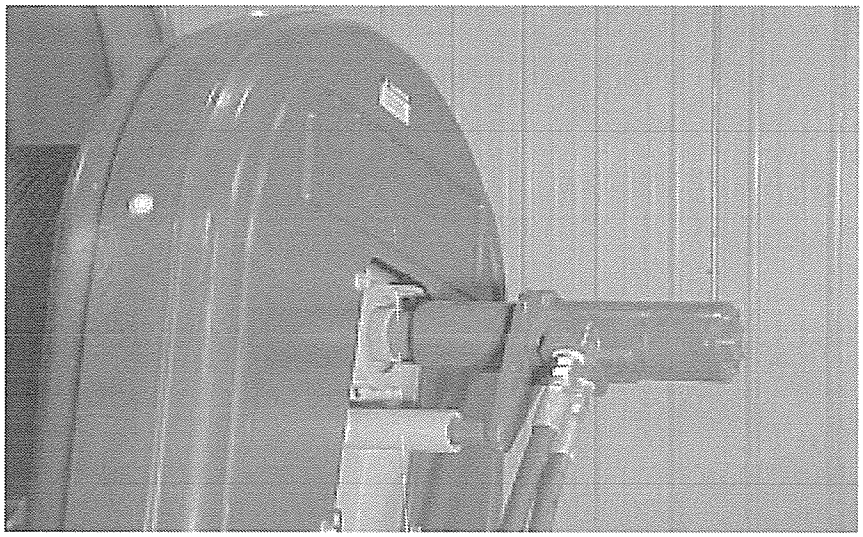

Hydraulic Lift Jack

The Hydraulic Lift Jack can be used for both maintenance of your Ag-Bagger® and moving the wheels and axles from transport to bagging position.

Option: G6060A, G6060B, G6060C, G6070B, and G6070C

Not Available: PB6000

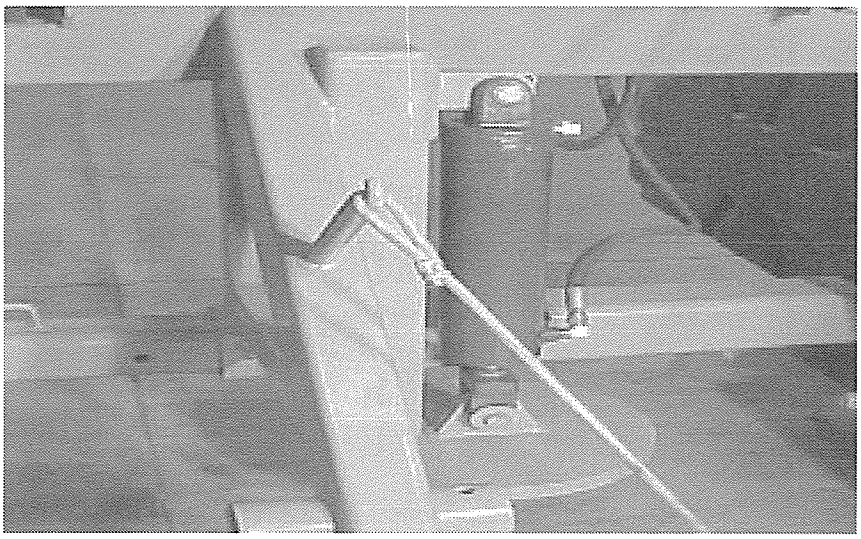

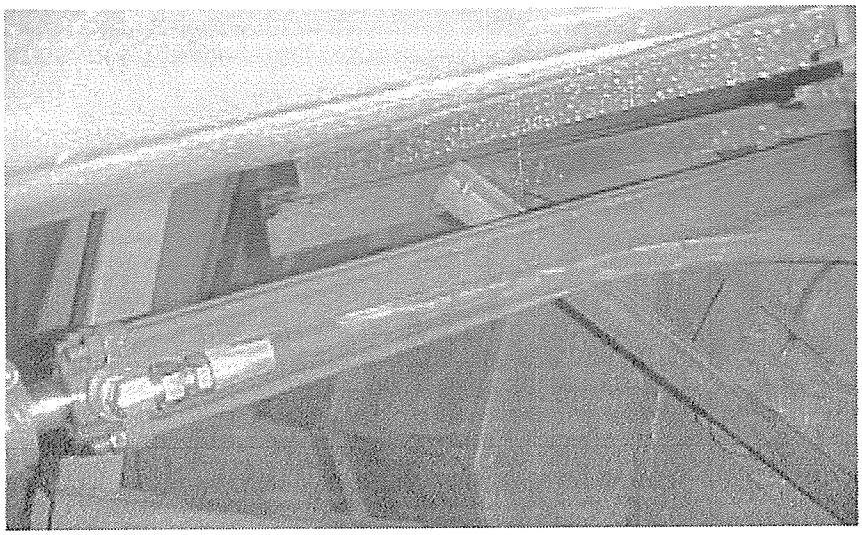

Hydraulic Conveyor Lift

The valve located on the hydtrulic tank controls the conveyor lift. The lift is used to adjust the conveyor position over the hopper. This allows for easier placement of product into the hopper.

Optional: G6060A, G6060B, G6060C, G6070B, and G6070C

Not Available: PB6000

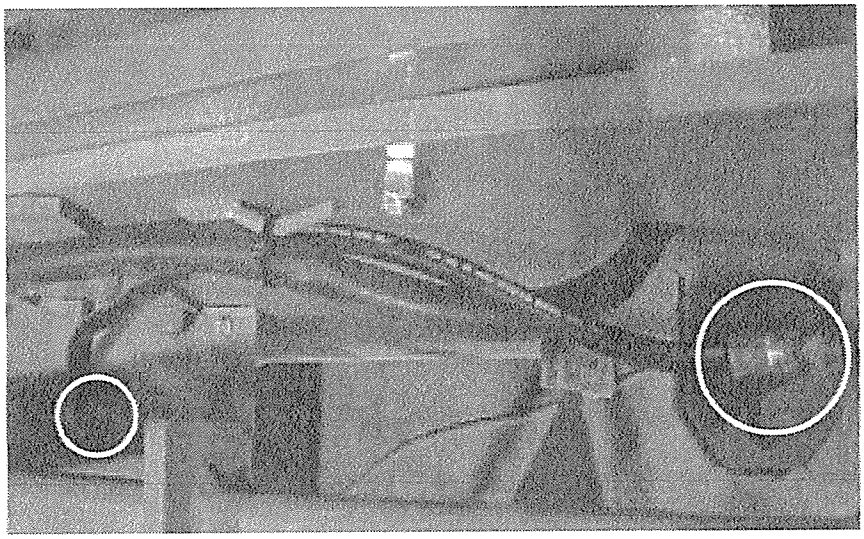

Rotor Bearing Grease Whip

Located at each end of the rotor the feature allows easy service to the rotor bearing.

Standard: All Models

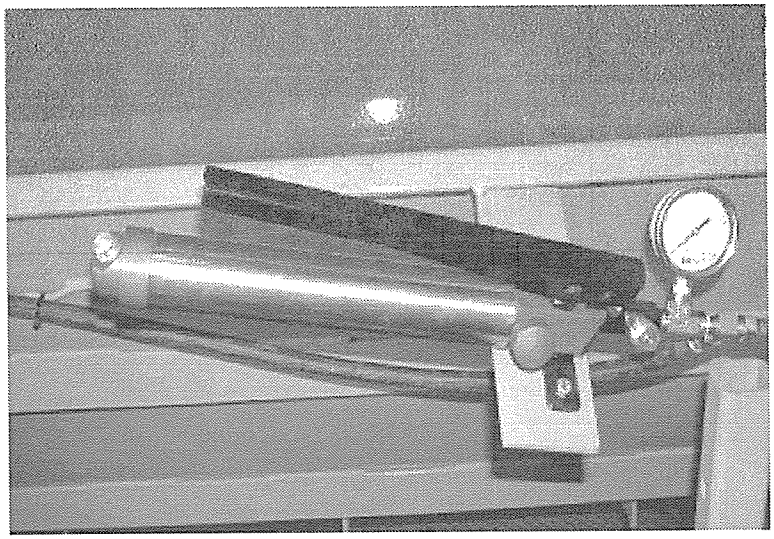

Hydraulic Hand Pump

The hand pump applies hydraulic pressure to the cable drum brake to maintain cable tension as the bag fills. The hand pump is located above the jack stand.

Standard: All Models

Pressure Gauge, Cable Drum Brake

The pressure gauge indicates the hydraulic pressure in the brake system.

Standard: All Models

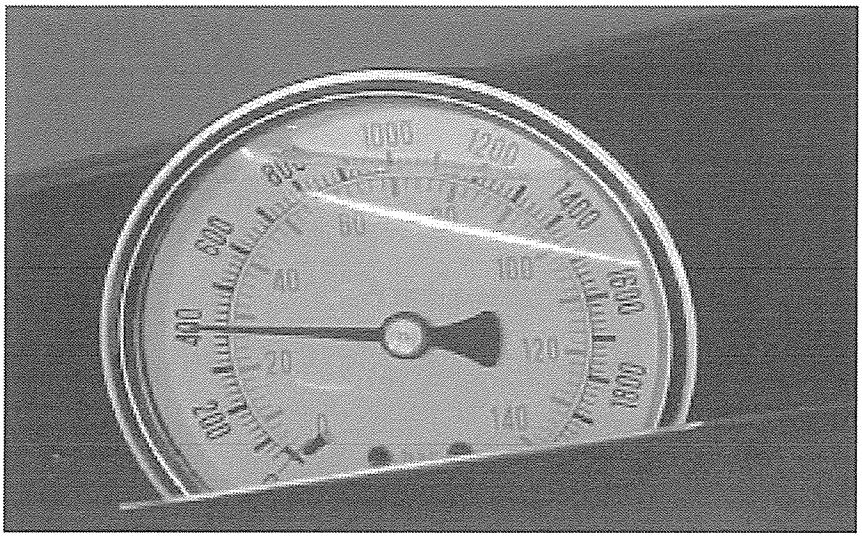

Lift Jack

The lift jack is used to reposition the wheels. The square receiver allows for a safer connection. The receiver is welded onto the tow hitch.

Standard: All Models

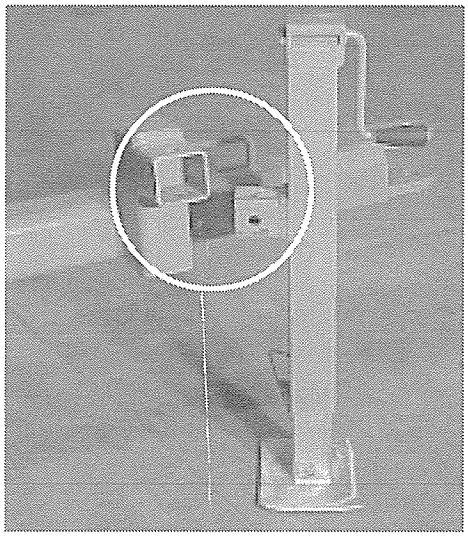

Jack Stand

The jack stand is an important part of the wheel positioning procedures. It is required to stabilize the Ag-Bagger® while changing wheels from bagging to transport and back. The jack stand is made up of a foot, sleeve and pin. Pictured in the raised position.

Standard: All 6060 and 6070 models

Not Available: PB6000

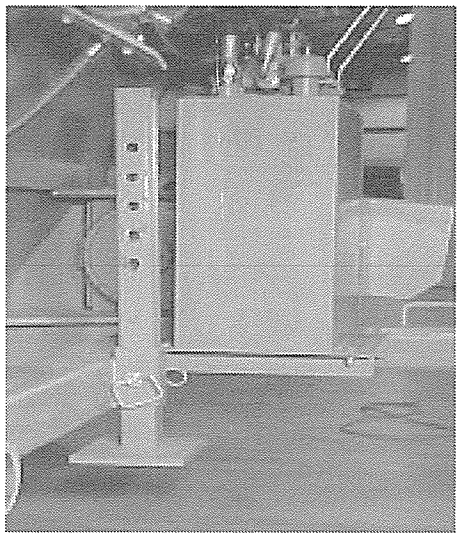

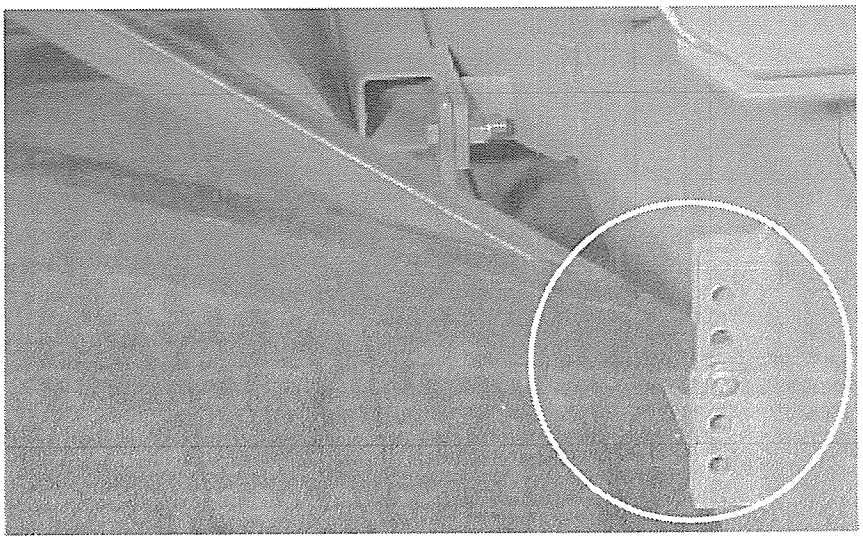

Conveyor Height Adjuster

The height adjuster, on the lower end of the conveyor, tilts the conveyor up or down to match delivery vehicle height. Can also be used to adjust product placement in the hopper.

Standard: All Models.

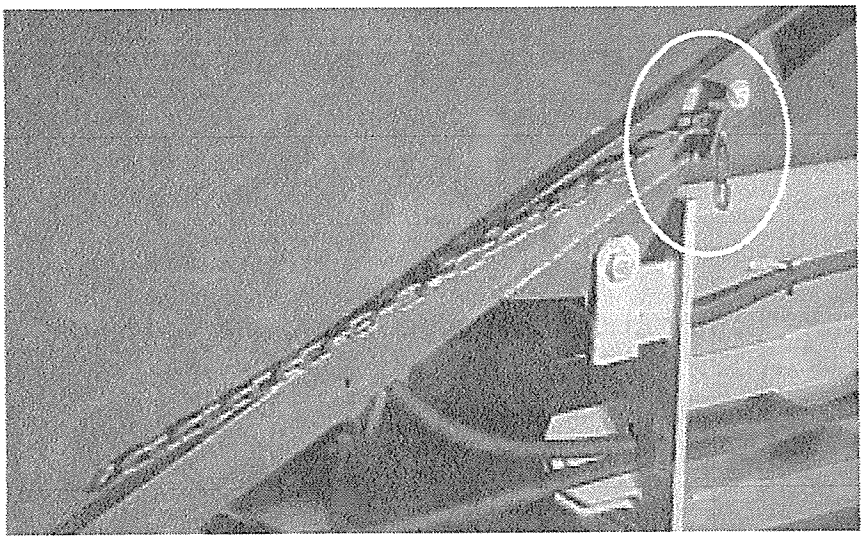

Conveyor Lock

The safety chain on the side of the conveyor needs to be latched when the conveyor is in transport position.

Standard: All Models.

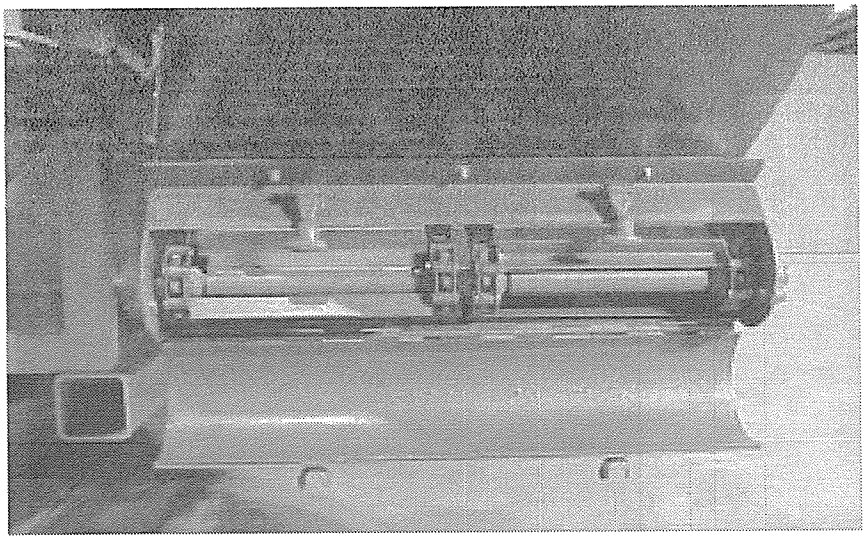

Conveyor Clean-Out Door

The conveyor clean-out door is located at the bottom end of the conveyor. The clean-out door allows product to be cleaned out of the chain and sprockets. Two rubber latches keep the door shut.

⚠WARNING

Never operate the conveyor when the clean-out door is open.

Conveyor Winch

The winch slides the conveyor up and down into bagging or transport position. Also used to adjust conveyor for better product placement in the hopper.

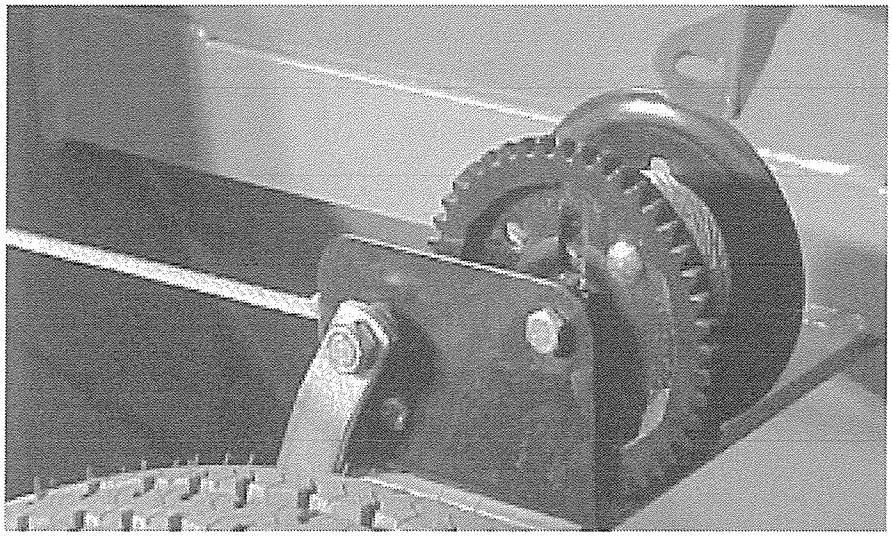

Single Hydraulic Control (Flow Control) Valve

Located above the Hydraulic Tank this controls the speed of the Conveyor. Installed with the Hydraulic Package which eliminates the requirement of using the tractors hydraulics to adjust the speed of the conveyor.

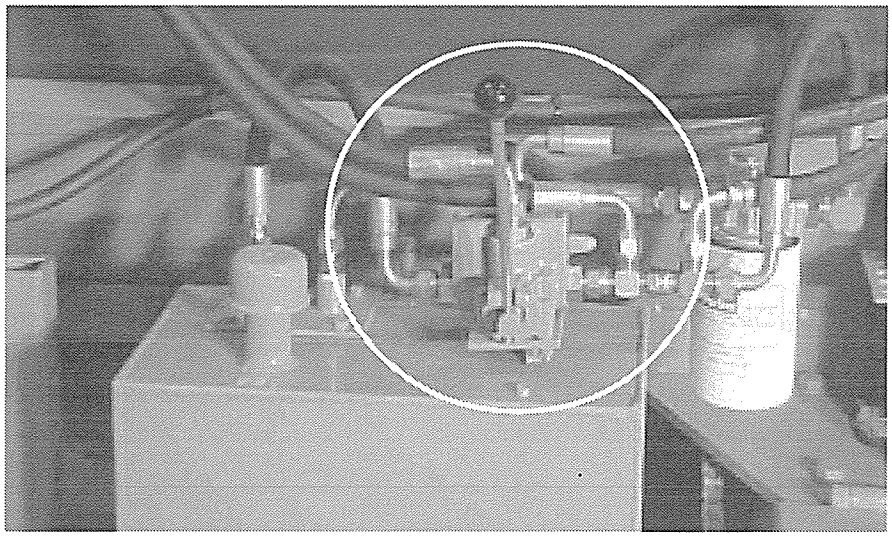

Double Hydraulic Valves

Located above the Hydraulic Tank. The right-hand valve controls the Cable Rewind and Conveyor Speed. The left-hand valve raises and lowers the Conveyor.

Opiont

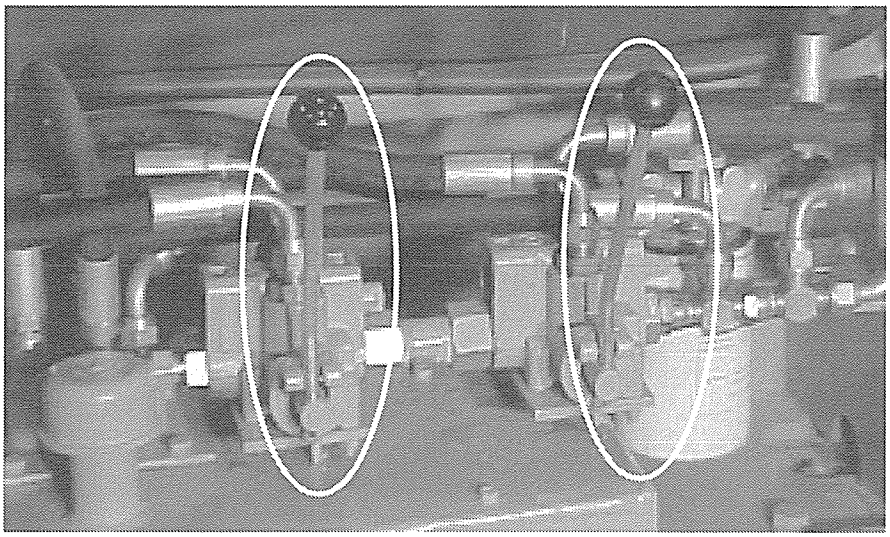

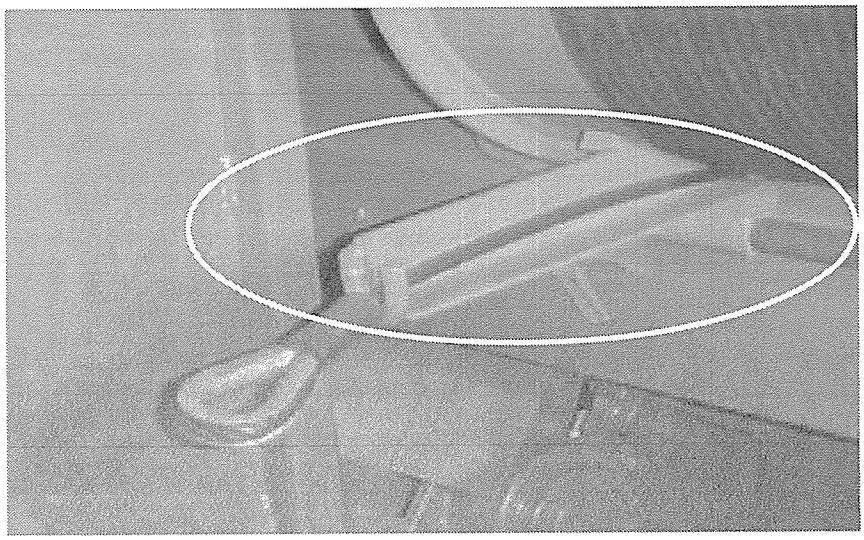

Cable Rewind Guides

The cable rewind guides help wrap the cables correctly onto the drums. Do not place the cables in the rewind guides while the backstop is connected during the bagging operation. See setup section of this manual for more information.

Standard: All Models.

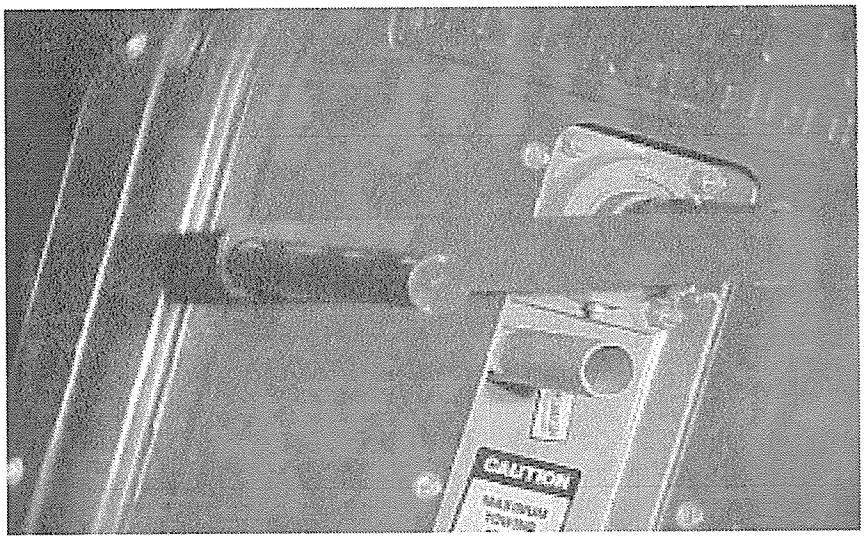

Cable Rewind Hand Crank

Use the cable rewind hand crank to manually wind cables onto the cable drums. The hand crank slides over the end of the cable drum shaft and is secured with a bolt and nut. Included with all Ag-Baggers®.

Standard: All Models.

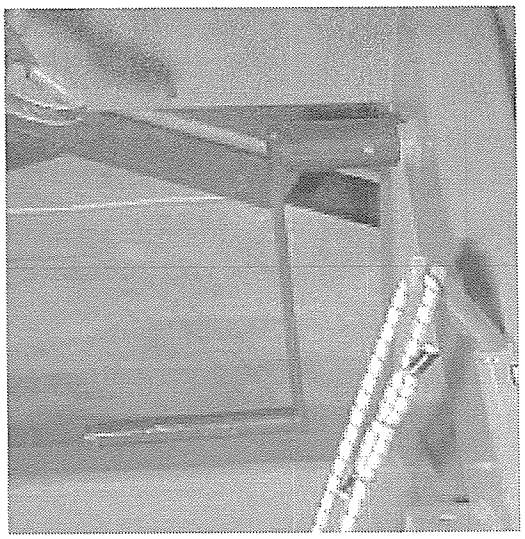

Cable Rewind Hand Crank Storage

When not in use the Hand Crank conveniently stores below the frame under the cable drum.

Standard: 6060 - 6070

Gandy Inoculant Applicator

Your Ag-Bagger® may be equipped with a dry inoculant applicator. Pictured here is the Gandy applicator.

Optional: Included as an option on all models.

Spotlite Liquid Inoculant Sprayer

Your Ag-Bagger® may be equipped with a liquid inoculant applicator. Pictured here is the 27 gallon Spotlite Liquid applicator.

Optional: Included as an option on all models.

Ag-Bag Plus® Inoculant

Ag-Bag offers both dry and liquid inoculant through its Ag-Bag Plus® line.

For the Gandy applicator purchase the 100 Ton buckets of dry inoculant.

For the Spotlite 27 gallon sprayer you can purchase either the 50 or 100 ton pouches of inoculant.

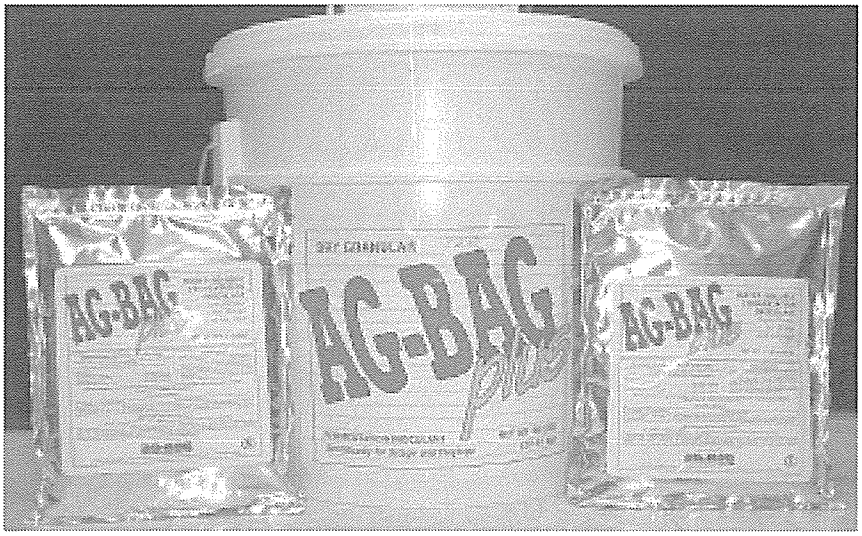

Index

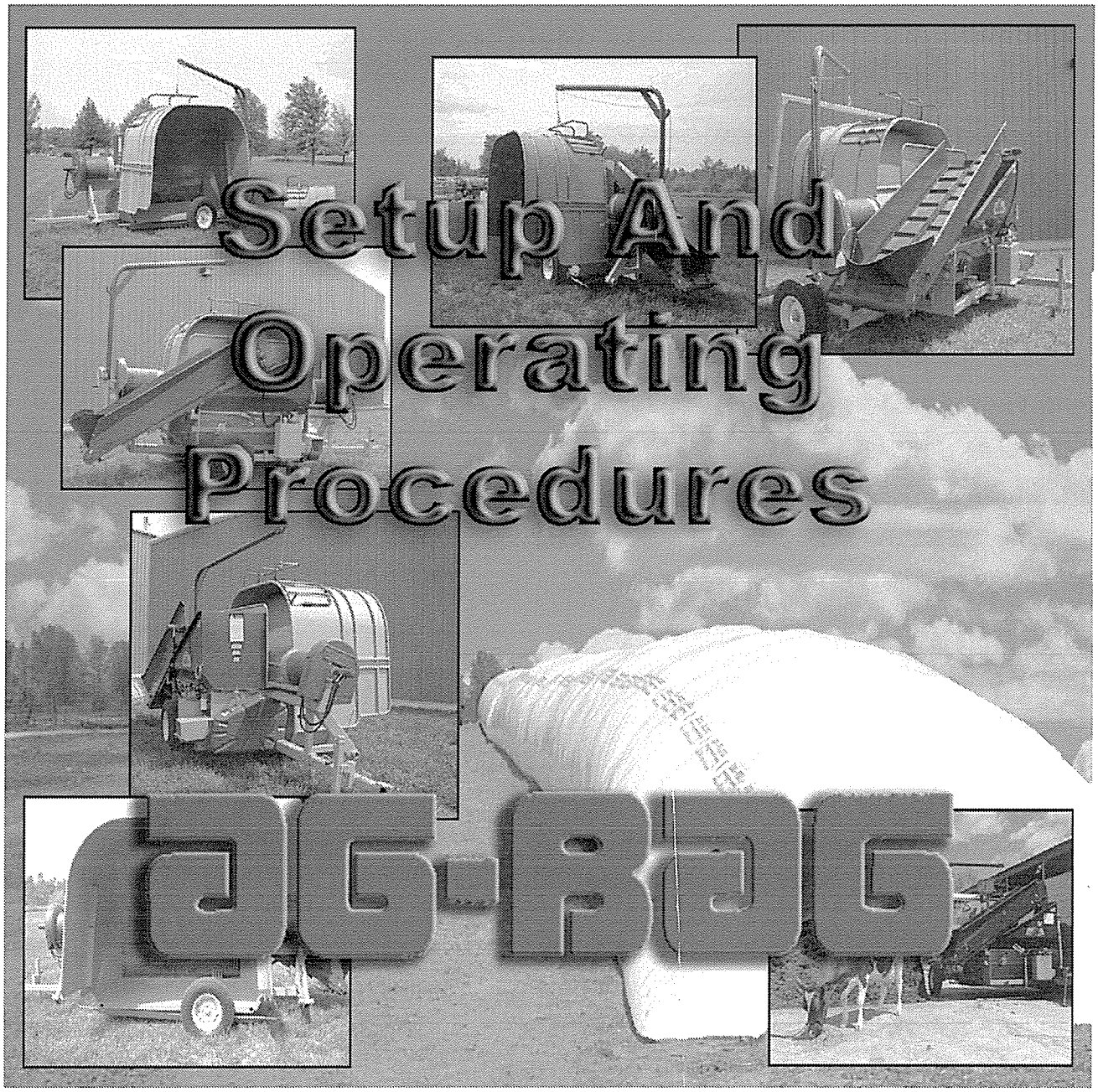

To obtain the best performance from your Ag-Bagger® it is important that you read and understand the setup and operating procedures contained in this manual. You should also assure that all personnel who will be operating the Ag-Bagger® read and understand this material. Special attention should be paid to the warnings contained in the manual. Remember Safety is First in operating this equipment. Your Ag-Bag® Dealer will assist you in the initial setup of your Ag-Bagger® and provide you with assistance in obtaining the best results.

Table of Contents

CHANGING THE WHEELS TO BAGGING POSITION

NOTICE

The Ag-Bagger® should be moved to the bagging site before proceeding.

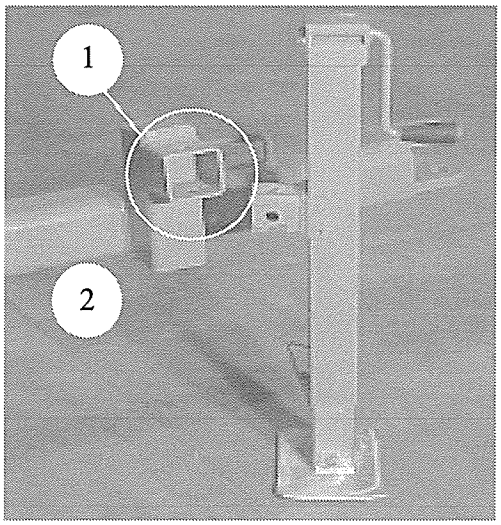

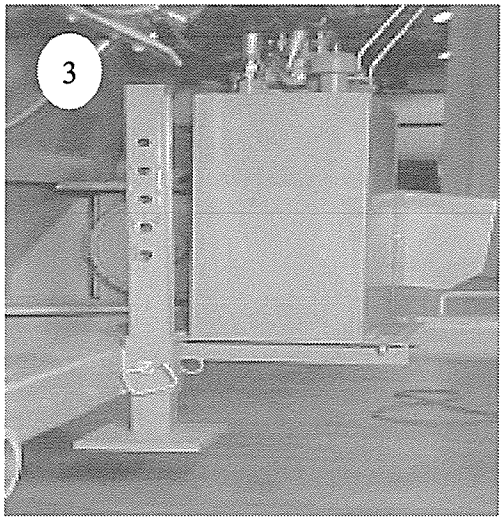

Moving the First Wheel

1. Fasten the lift jack to the tow hitch.

2. Crank the lift jack up.

3. Lower the jack stand to the ground. Secure the jack stand in the down position with the pin.

CHANGING THE WHEELS TO BAGGING POSITION (CONT.)

4. Crank the lift jack down until the wheel under the conveyor comes off the ground.

5. Remove the wheel from the socket under the conveyor. Pull the pin and remove the entire assembly.

6. Crank the lift jack up.

7. Insert the wheel into the socket to the right side of the tow hitch.

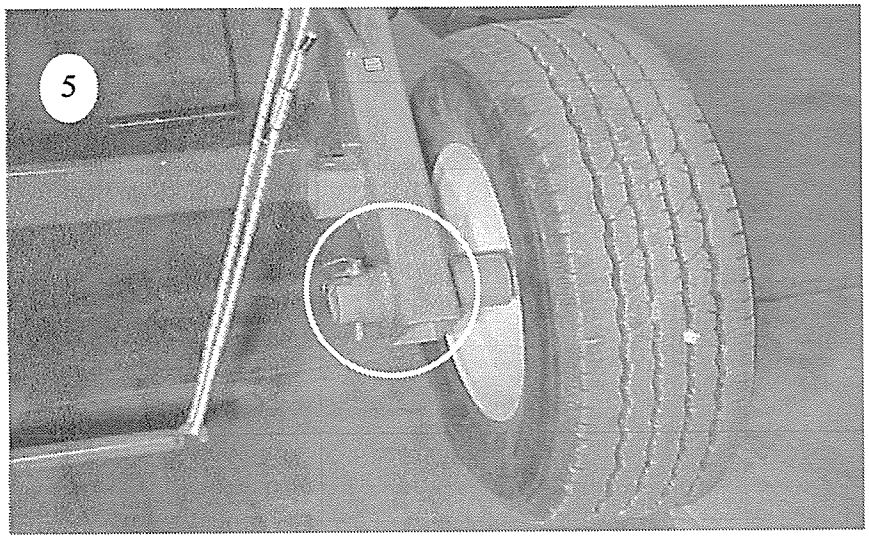

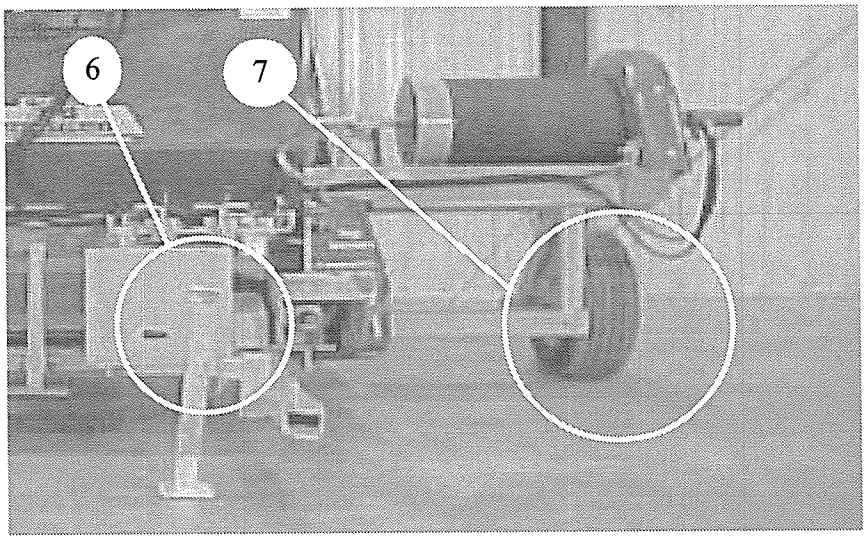

CHANGING THE WHEELS TO BAGGING POSITION (CONT.)

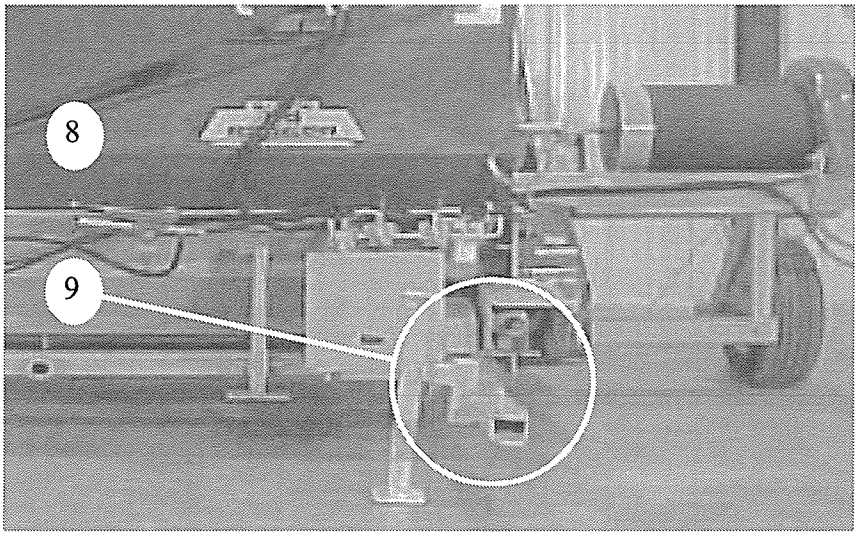

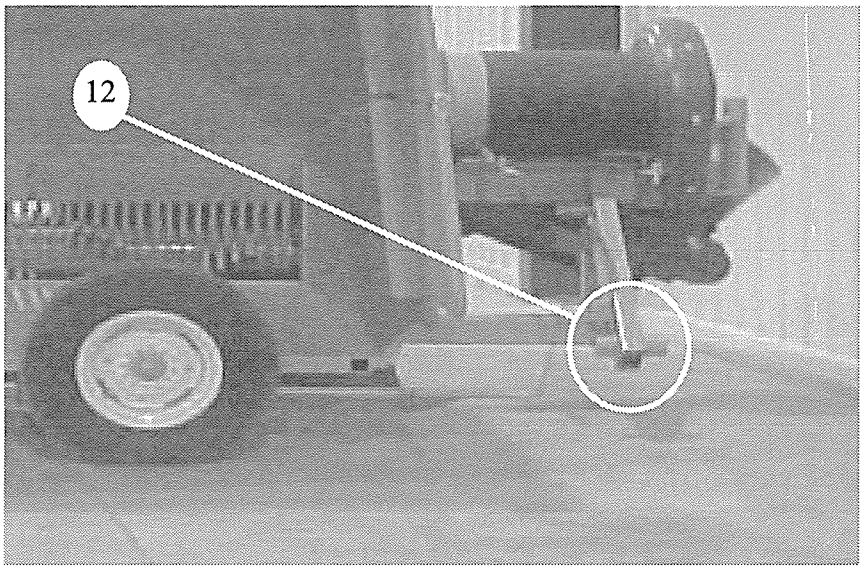

Moving the Tow Hitch

8. Crank the lift jack down and remove it from the tow hitch.

9. Move the tow hitch to the socket below the gearbox.

Moving the Second Wheel

10. Insert the lift jack into the socket located on the wheel strut. Jack the Ag-Bagger® up.

11. Remove the wheel from inside the tunnel.

12. Insert the wheel into the bagging socket, near the lift jack.

13. Lower the lift jack so the wheels are touching the ground and remove the lift jack.

Make sure both wheels have been secured with the lock pin and hairpin.

PREPARE THE BACKSTOP

THE BACKSTOP NET

For ease in completing this operation, stand the backstop up and support with backstop feet.

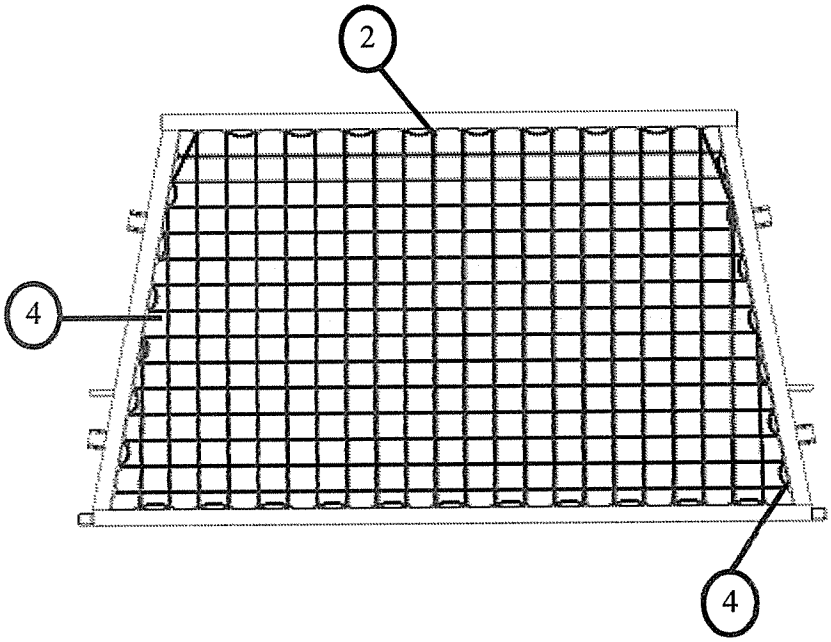

Lace the Backstop

1. Use the rope supplied with the Ag-Bagger®
2. Start in the middle of the backstop on the top of the frame. Make sure you find the middle of the rope, do not cut the rope.
3. Lace the rope through the vertical rope eyelets going from the top to the bottom and from the center to the outside.
4. Weave the horizontal rope through the vertical rope. Start at the right hand side and go until all rope is gone, then move to the left and start again where the other rope ended. Tie the ropes to the backstop frame. Make sure you can untie the knot so you can tighten the ropes as required. See the pattern at left for correct lacing.
5. Stretch the rope tight and tie it off. Start by pulling the vertical lacing then do the horizontal lacing.
6. Tighten the ropes after a few bags. This keeps the bag from sitting down on the backstop frame.

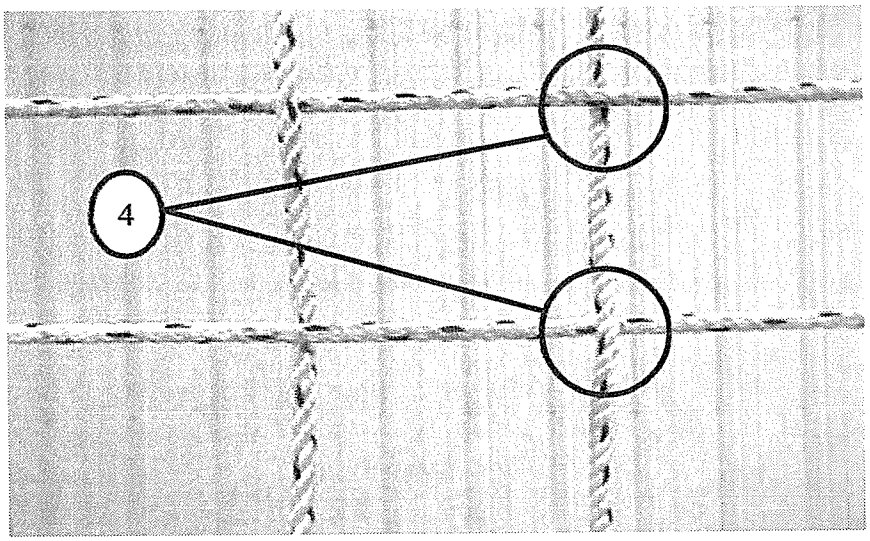

NOTICE

Inspect the backstop rope occasionally, tighten and replace as needed.

PREPARE THE BACKSTOP (CONT.)

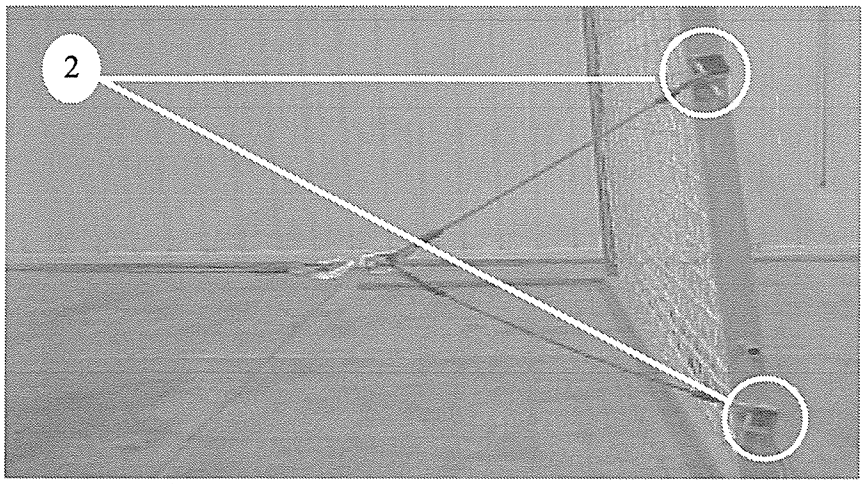

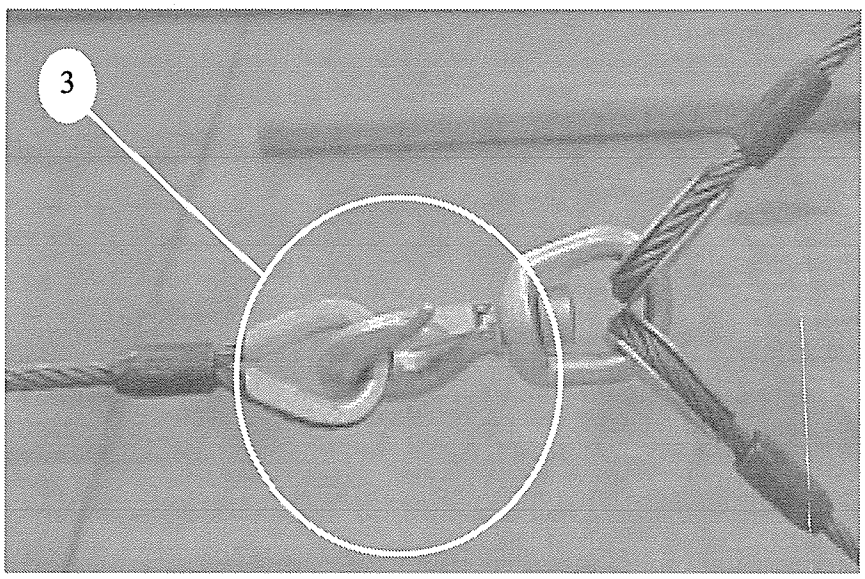

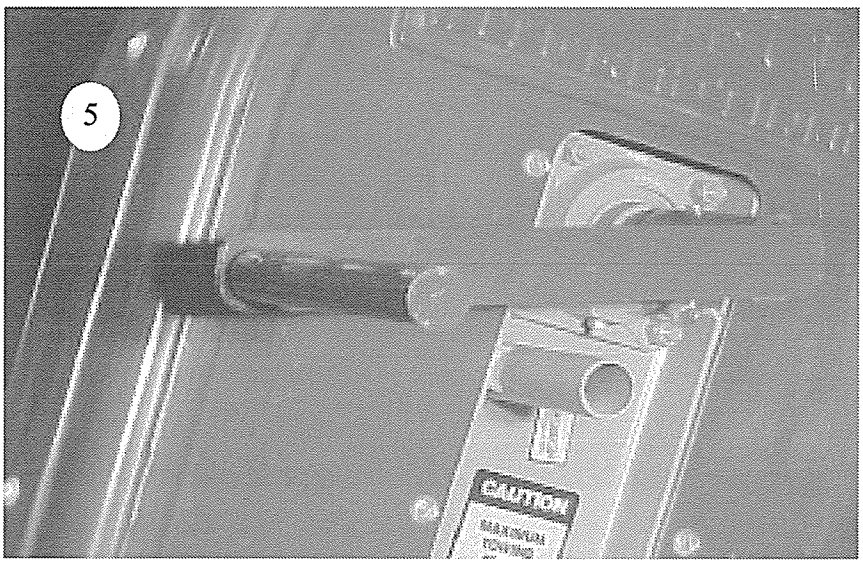

NOTICE

After the backstop has been laced return the backstop feet to the tunnel sockets.

1. The backstop may need to be laced. See Section 4 page 4.6.

2. Fasten the backstop slings to the backstop making sure you connect both sides. Use the eyes on each end of the sling and pin them into the brackets that are provided.

3. Connect the slings to the cable making sure you connect both sides.

4. Place the backstop in the transport supports.

5. Use the hand crank to tighten the cables. On Baggers with Hydraulic Cable Rewind, the hand crank can be attached on the left hand cable drum. Use the hydraulic hand pumpto apply the cable drum brake.

INSTALLING THE TUNNEL EXTENSION

It is recommended that two people do this task.

Step 1: Connect hook on bag boom cable to rod located on the tunnel extension.

Step 2: Using the bag boom, lift and swing extension, positioning it in the tunnel opening. Move extension towards tunnel until it is inside the opening. There is a six inch lip that should rest inside the tunnel.

Step 3: Align the bolt holes on the tunnel and the tunnel extension.

Step 4: Install bolts. There are between 40 and 60 bolts that will attach the extension to the tunnel depending on the model of Ag-Bagger®.

Step 5: When installing the bolts start in the top center of the tunnel and work from the center out. ***All bolts should be installed.*** Working from the center install five bolts to the left then five bolts to the right until all bolts have been installed. ***Do not tighten bolts until all have been installed.***

Step 6: Tighten all bolts, starting in the center and working towards the bottom corners.

Note: Some pictures show the machine in the towing position. These pictures are used for demonstration purpose only.

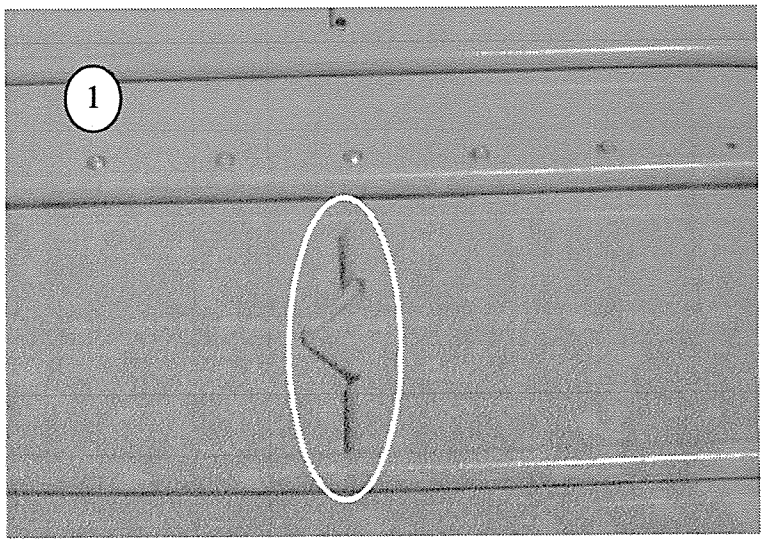

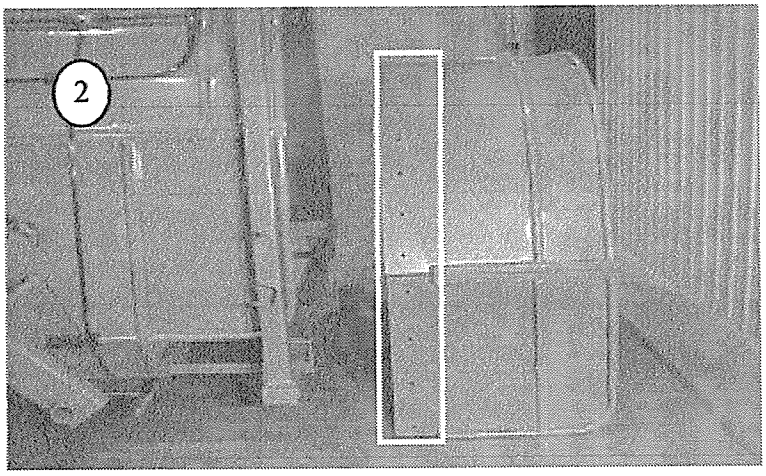

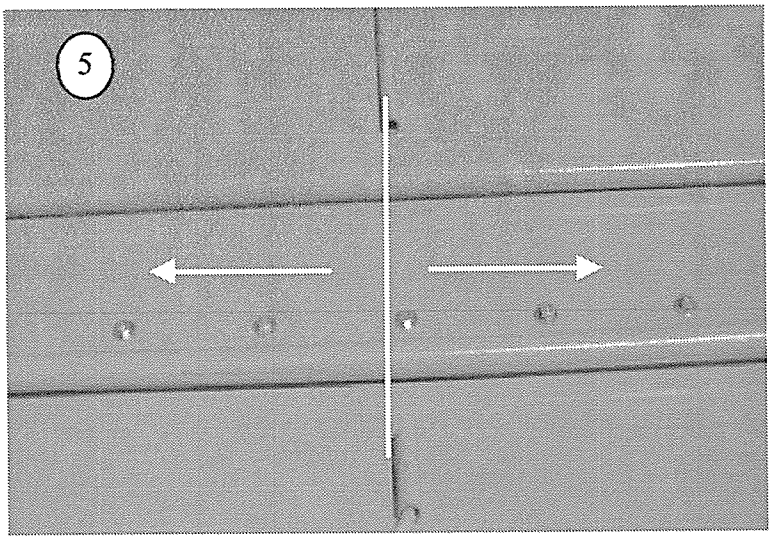

HOOK THE TRACTOR TO THE TOW HITCH

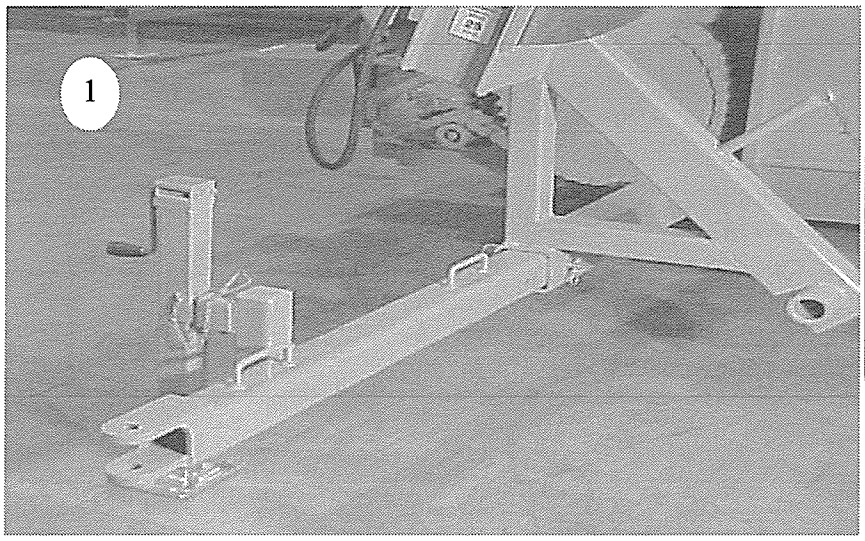

NOTICE

The tow hitch must be properly installed and locked into place with the hitch pin and hair pin.

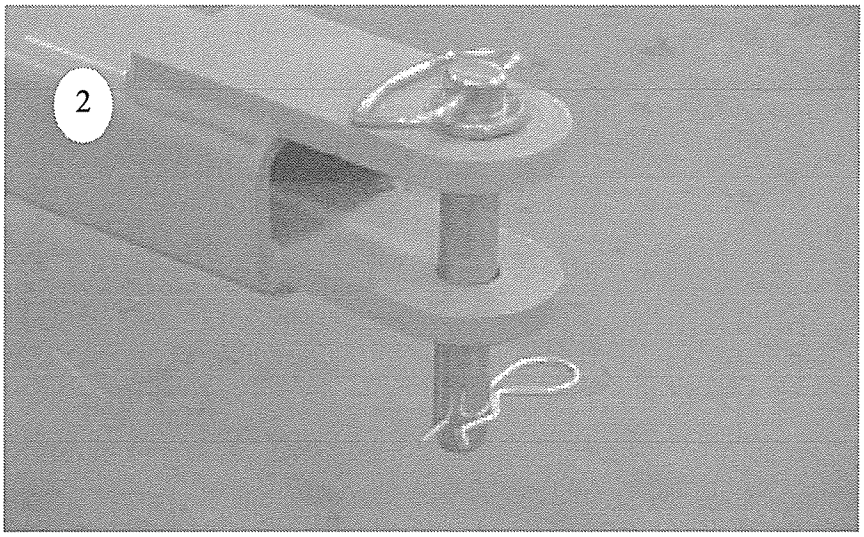

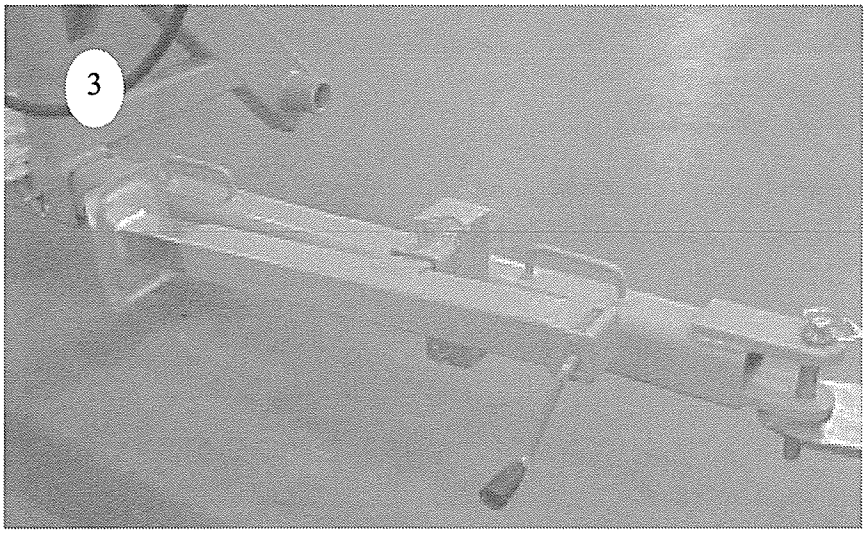

1. Crank the lift jack to make the Ag-Bagger® match the tractor drawbar.

2. Fasten the tractor to the hitch. Use a hitch pin and hair pin.

3. Crank the lift jack until it is off the ground. Remove the lift jack pin, rotate the jack 90 degrees, and reinsert the lift jack pin.

It is important to remember that this procedure works for both connecting the road towing position and the bagging position. The only difference is the location of the two hitches.

Note: Some pictures show the machine in the towing position. These pictures are used for demonstration purpose only.

CONNECTING THE HYDRAULIC LINES

See your tractor manual for hydraulic port locations.

1. Clean the hose couplers and tractor ports.

2. Remove the caps from the hose couplers.

3. Connect the hose couplers to the correct tractor ports.

Note: This procedure is only required for machines without the Hydraulic Package.

CONNECTING THE INOCULANT APPLICATOR

Connect the inoculant applicator electronics to the tractor's connectors. Consult your Ag-Bag® Dealer and tractor operator's manual for specific instructions.

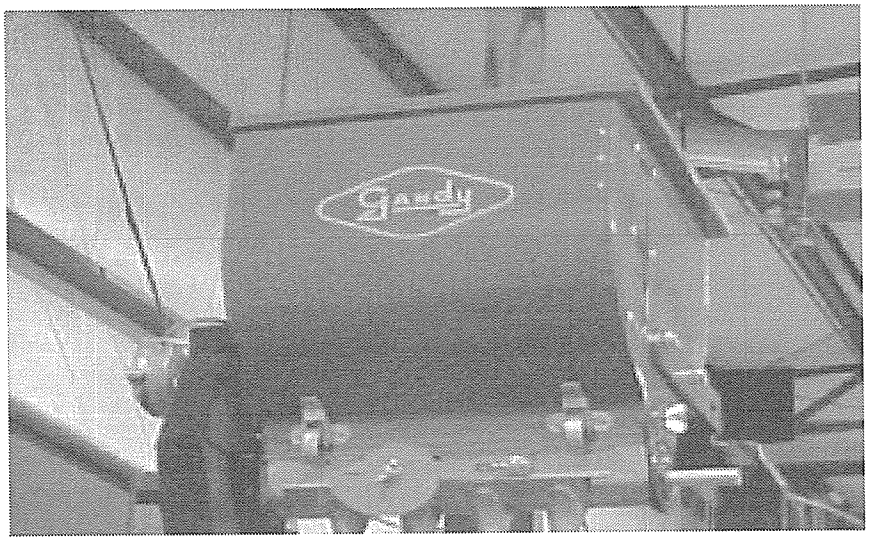

SET THE BACKSTOP AND PREPARE FOR BAG INSTALLATION

WARNING

Possibility of serious Injury. Use caution when moving back-stop.

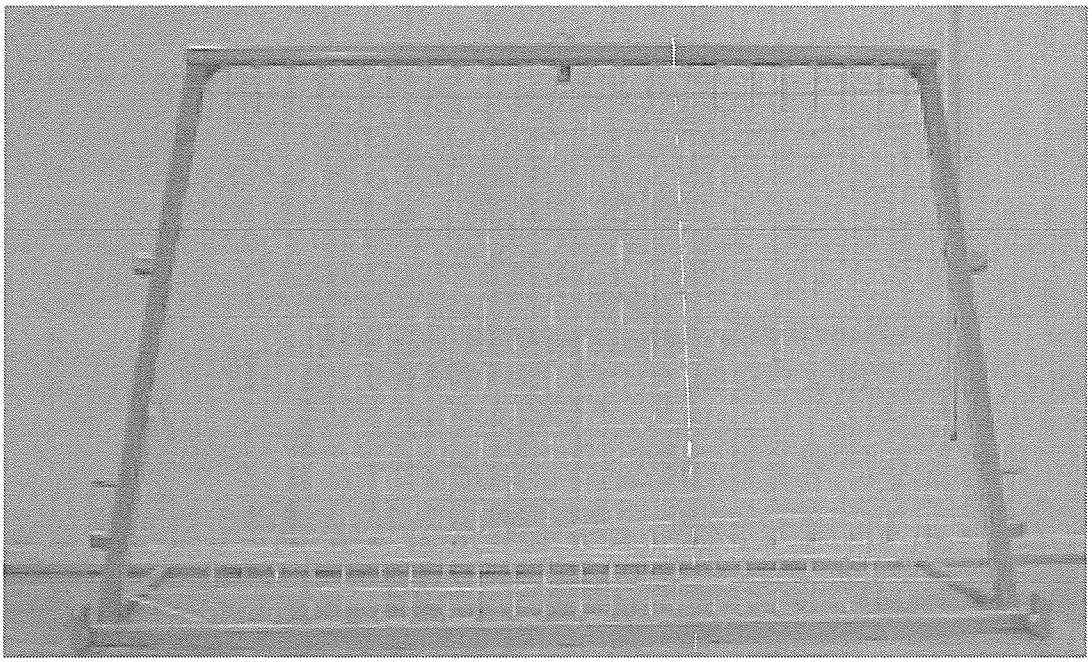

SET THE BACKSTOP AND PREPARED FOR BAG INSTALLATION (CONT.)

1. Place the Ag-Bagger® where the bag will begin.

2. Using the valve on the Hand Pump, release the cable brake pressure.

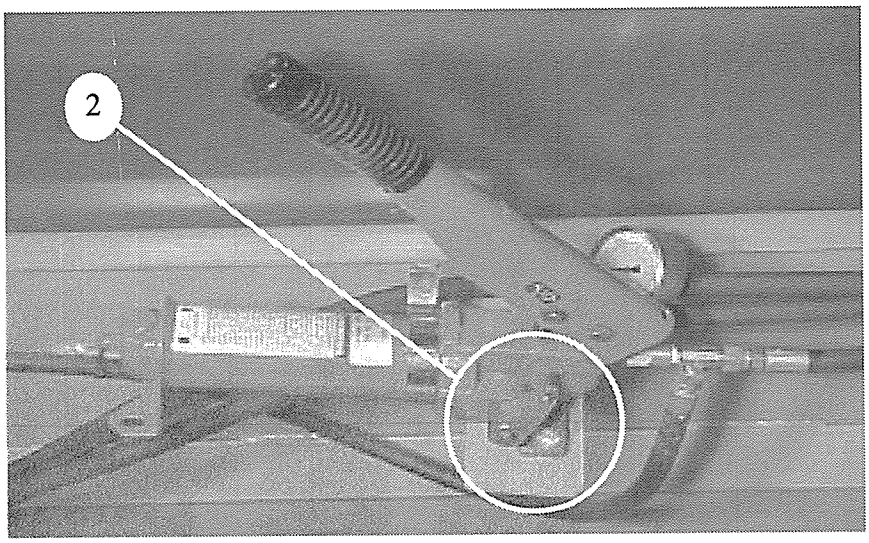

3. Unhook the backstop slings from the cables.

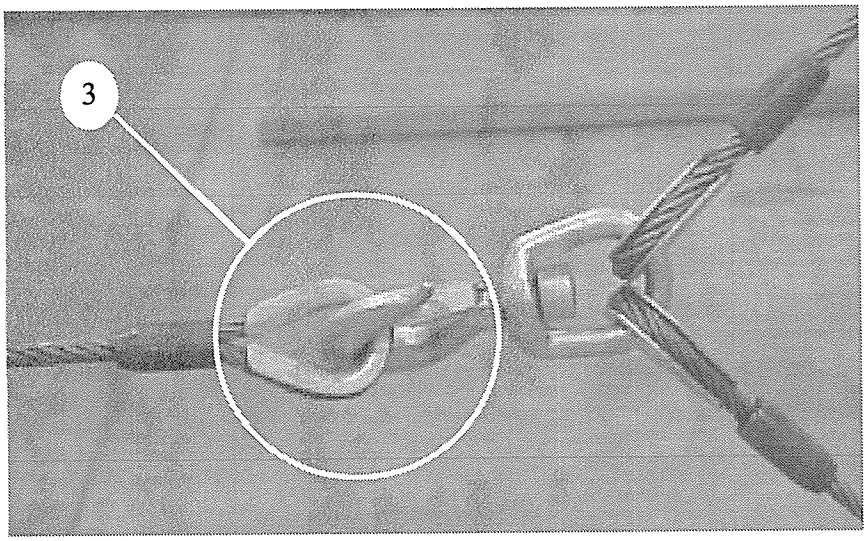

4. (a) Lift the backstop off of the support feet.

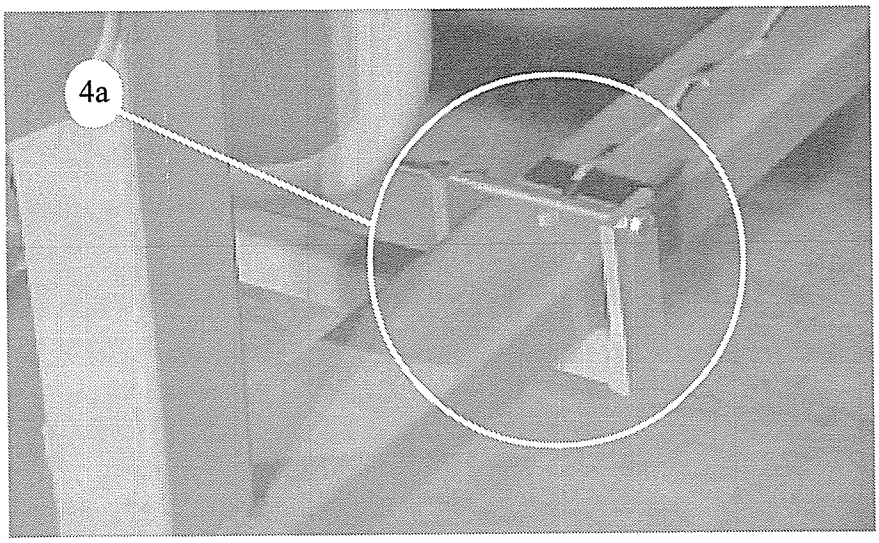

SET THE BACKSTOP AND PREPARED FOR BAG INSTALLATION (CONT.)

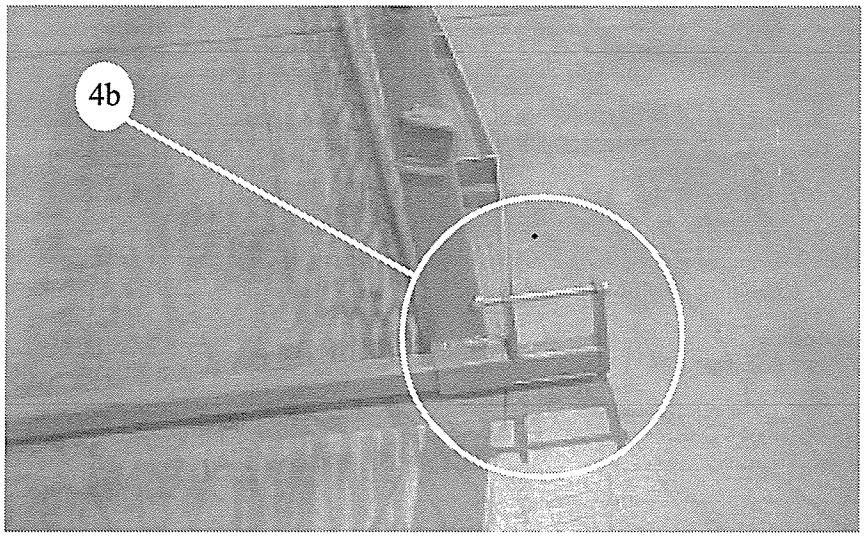

4. (b) Remove the feet from the Ag-Bagger® and insert them into the backstop. They help hold the backstop in the upright position.

5. Pull the Ag-Bagger® forward. Make plenty of room for bag installation.

IDENTIFYING YOUR AG-BAG® BAG

Remember to use only Ag-Bag® bags. They are designed to fit and function properly. They are identified by the TRI-DURA® name on the box. Other brands may fail or cause product loss.

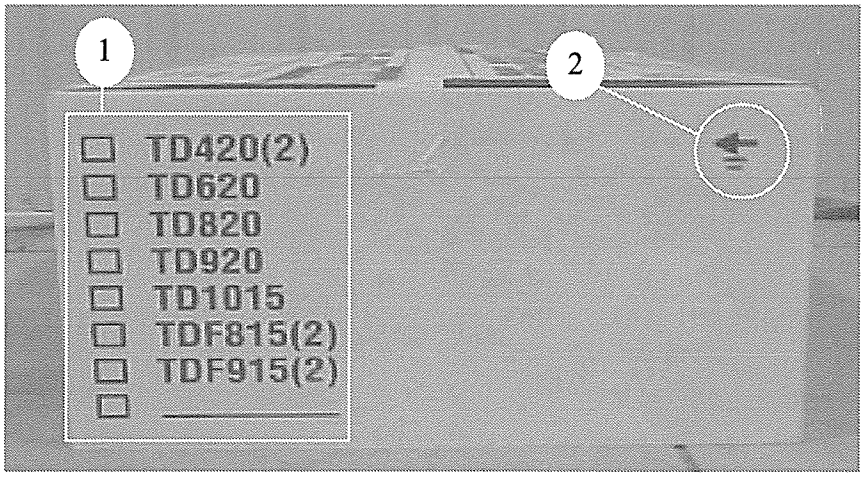

The box end contains two pieces of information:

1. The size of bag that is in the box.

2. The arrow on the side of the box should be pointing towards the Ag-Bagger®

WHAT SIZE AG-BAG® BAG CAN I USE?

PB6000	
8 Foot Tunnel	**9 Foot Tunnel**
TD810	TD913
TD815	TD915
TD820	TD920

G6060A - G6060B - G6060C	
8 Foot Tunnel	**9 Foot Tunnel**
TD810	TD913
TD815	TD915
TD820	TD920

G6070B – G6070C	
9 Foot Tunnel	**10 Foot Tunnel**
TD913	TD1015
TD915	TD1020
TD920	TD1025
TD925	

INSTALLING THE AG-BAG® BAG

NOTICE

Remember to use only Ag-Bag® bags. They are designed for use with this equipment. See size chart for the proper size for your machine.

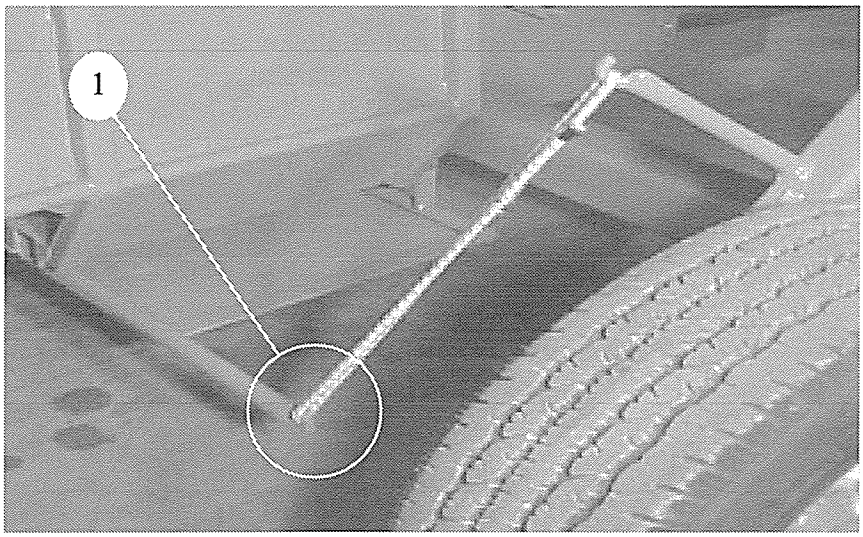

1. Lower the bag pan by unhooking the bungee cords. Connections are located at each end of the bag pan, be sure to unhook both ends.

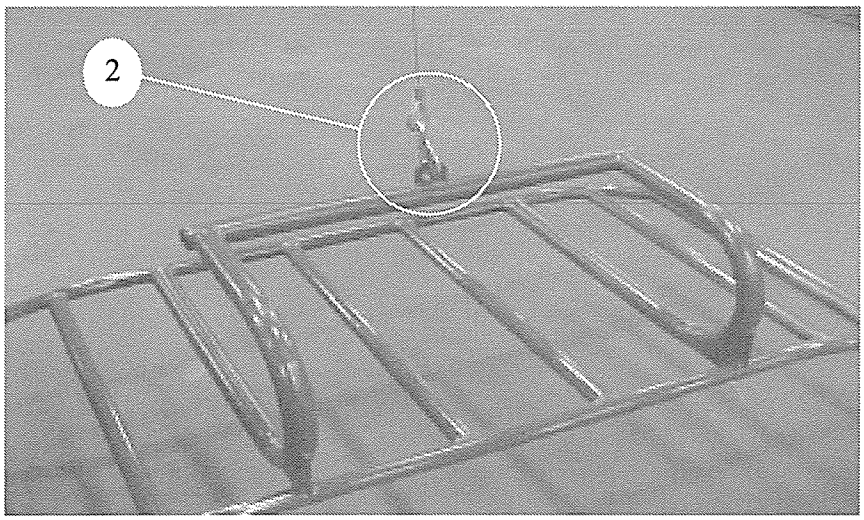

2. Latch the bag boom cable hook to the bag cradle lifting lug.

3. Lift the cradle from the tunnel and lower it to the ground, setting it to the rear of the machine centered in the tunnel opening. Between the tunnel and the bag box.

INSTALLING THE AG-BAG® BAG (CONT.)

⚠CAUTION

Caution should be used while moving bags into place. The weight of the bags, depending on size ranges from 129 to 403 pounds.

4. Line the box up with the back of the tunnel, making sure the arrow on the box end is pointing towards the tunnel, cut the plastic bands and remove the outer lid. Do not remove tape or rope until bag is on the tunnel. Remove the inner shell and the box will flatten.

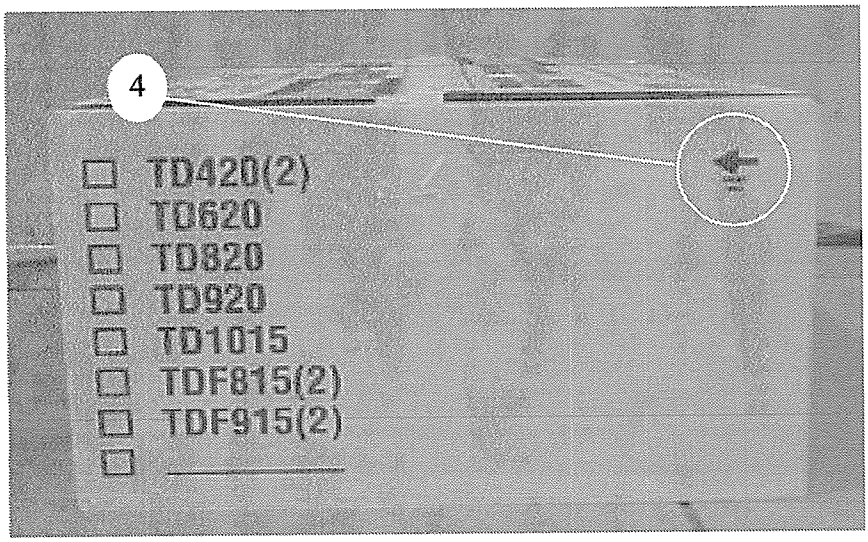

5. Unfold the bag and lift the top half of the bag and place it on the bag cradle. Using the bag boom raise the bag and then rotate the bag so the Ag-Bag® stretch measure mark is between 1 and 3 o'clock.

INSTALLING THE AG-BAG® BAG (CONT.)

NOTICE

Possibility of bag damage. Do not roll the bag, place it on the tunnel keeping the folds flat.

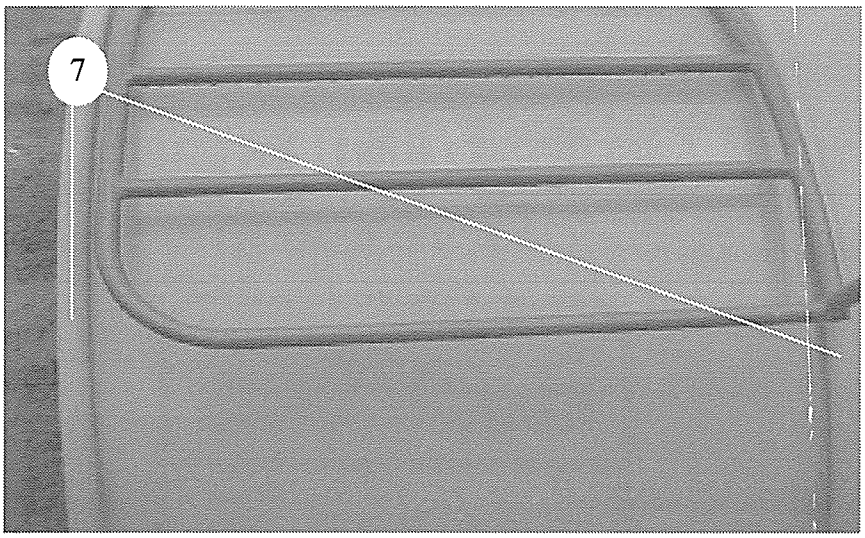

6. Crank the bag boom winch up until the cradle is above the tunnel, swing the boom and cradle toward the tunnel. Work the bag around the tunnel making sure the bag maintains its flat look.

7. Lower the cradle until it is resting on top of the tunnel. Make sure the cradle is on the tunnel and not the optional tunnel extension. The cradle should rest between the two pipes on the tunnel. Remove all the tape or ropes that hold the bag folds together.

INSTALLING THE AG-BAG® BAG (CONT.)

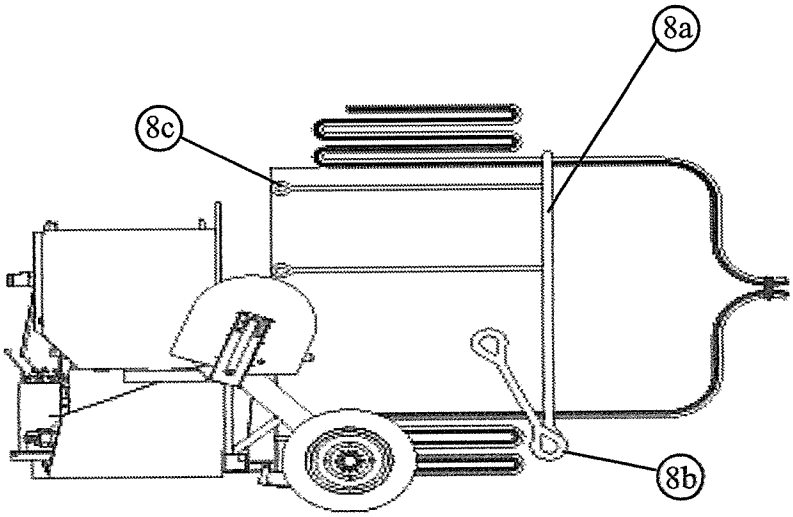

8. Installing the bungee cords. (The bungee cords are shipped with the machine)

a. Lay the bag bungee cord over the tunnel.

b. Connect the bag bungee cord to the bag pan hooks.

c. Tie the cords to the bag bungee and the 4 tunnel eyes making sure that the bag bungee is evenly spaced around the tunnel. Keep these cords.

d. Lift the bag pan up and fasten the bag pan bungee cords on both sides. Maintain a 3/4 inch gap between the tunnel and bag pan.

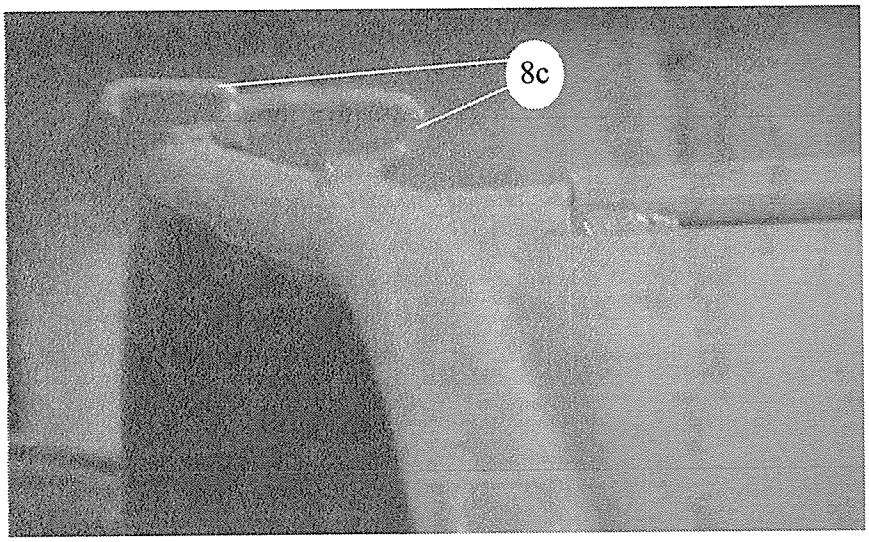

NOTICE

Possibility of bag damage. A minimum 3/4 inch gap must remain between the tunnel and bag pan.

INSTALLING THE AG-BAG® BAG (CONT.)

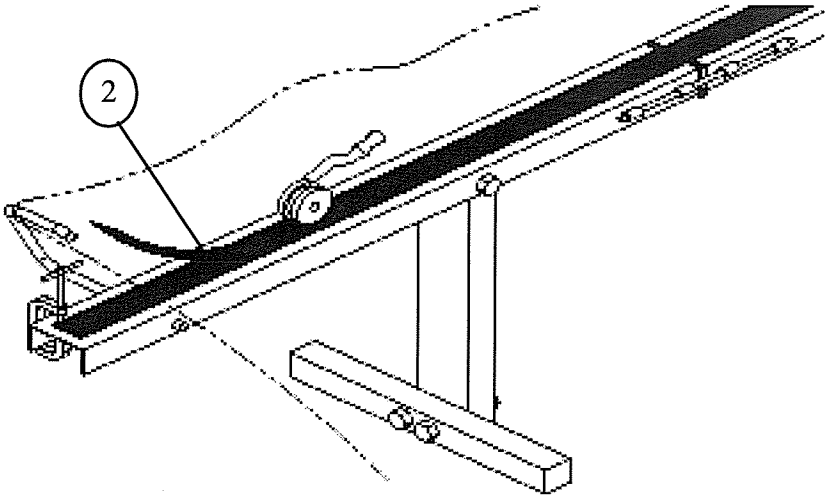

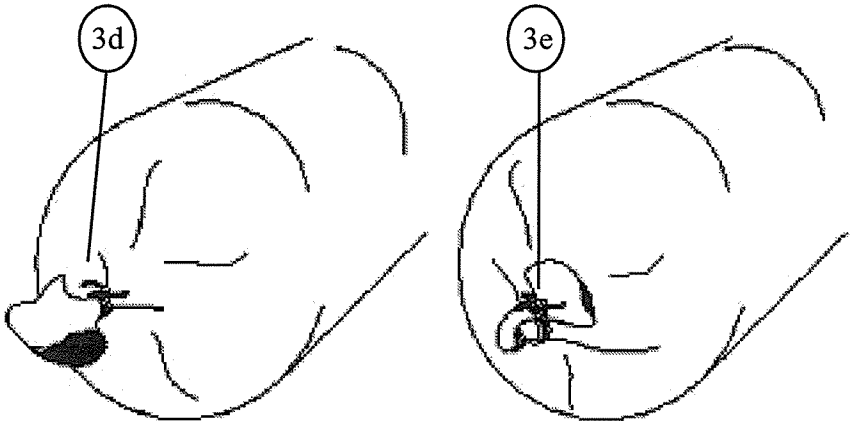

Seal the Beginning End of the Bag

1. Pull off enough bag to apply the seal. Pull from the inside folds, not the outside folds (white on the outside, black on the inside). Make sure you pull the bag <u>under</u> the bag bungee cord.

2. Seal the end of the bag using either Master Seal®. Follow the instructions included with the Master Seal®. Master Seal®, tool, and sealing board are available from your Ag-Bag® Dealer.

3. **OR**, use a Double Knot Tie. (a) find the end of the bag; (b) gather the bag to the center; (c) twist the bag tight; (d) tie the bag tight. Leave enough bag to fold over and (e) tie a second time giving the bag an airtight seal.

4. Slide excess bag back onto the tunnel and bag pan. Position the knot knee high.

HOOKING UP THE BACKSTOP

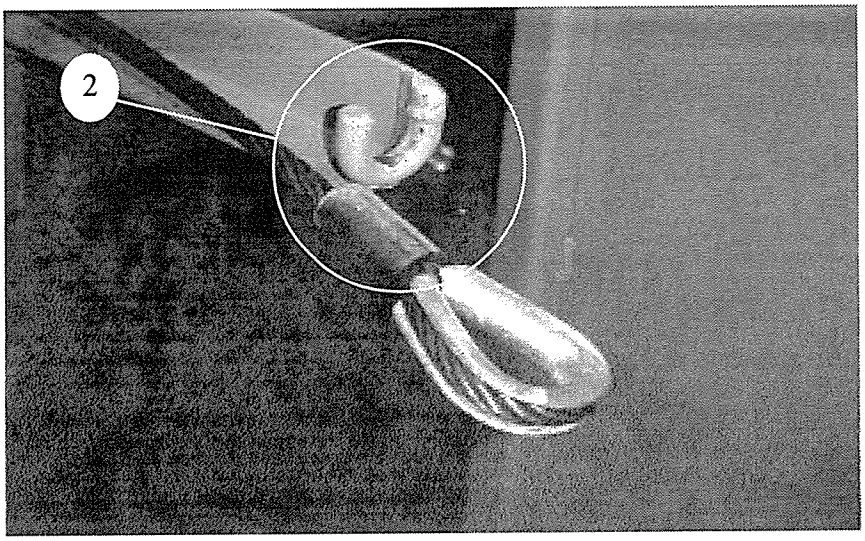

1. Make sure the Backstop is where you intend to start your bag then back the Ag-Bagger® up next to the backstop. The backstop should be aligned with the tunnel opening.

2. Release the brake pressure on the cable drum: using the cable rewind hand crank release some cable. Remove the backstop cables from the guides and attach the slings to the cables. Do not leave cable in guide during bagging operation.

3. Using the cable rewind hand crank, wind the cable slack back onto the cable drums.

4. Remove the backstop feet from the backstop. Do not use the backstop feet when bagging

5. Set cable drum brake.

NOTICE

Possibility of bag damage. Avoid leaning the backstop against the tunnel or place cardboard between the bag and backstop.

NOTICE

Possibility of equipment damage. Remove the cables from the cable rewind guides prior to bagging.

NOTICE

Foreign object(s) can damage stripper bar grill. Remove all objects from the hopper and conveyor before bagging.

NOTICE

Possibility of equipment damage. Do not leave backstop feet in the backstop during bagging.

CHECK THE CONVEYOR CHAIN TENSION

NOTICE

Possibility of equipment damage. Improperly adjusted conveyor chain can cause excessive wear on chain, damage bearings, shafts, and gears.

⚠CAUTION

Caution should be used when adjusting chain. Make sure tractor is shut off. Pinch Hazard can exist.

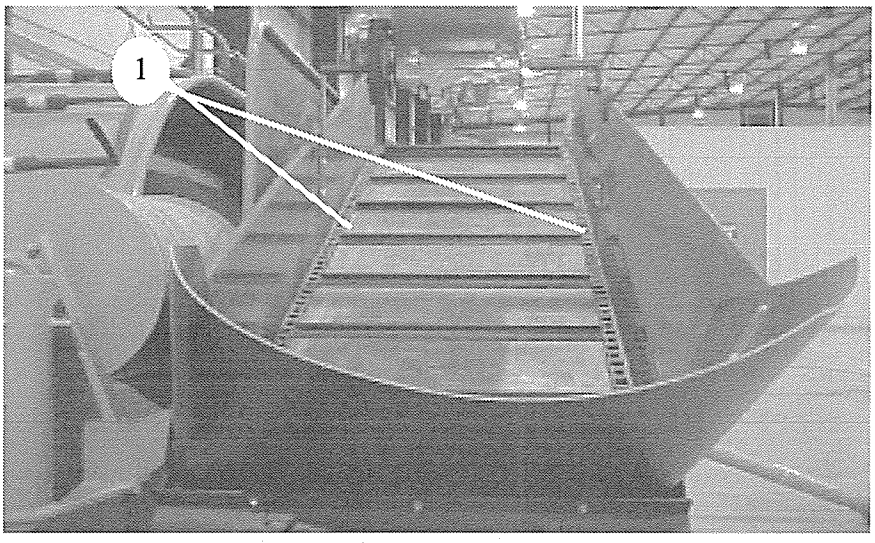

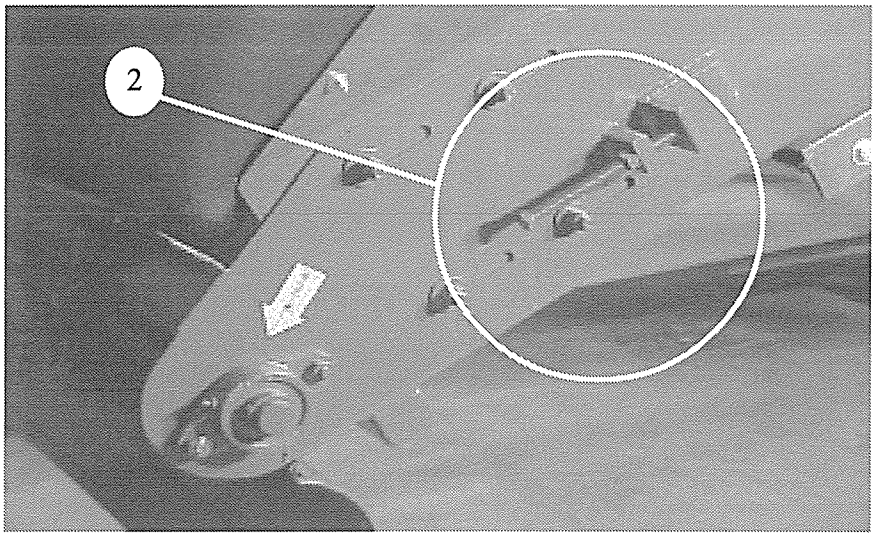

1. The chain tension should be checked in the middle of the conveyor. You should be able to lift the cable 2 inches on both sides of the conveyor. All four chains should be checked on the Split Conveyor.

2. Use the conveyor adjusting feature on the end of the conveyor to make adjustments.

Refer to the service section of this manual for the proper method of adjusting the conveyor chain.

HOOK UP THE PTO SHAFT

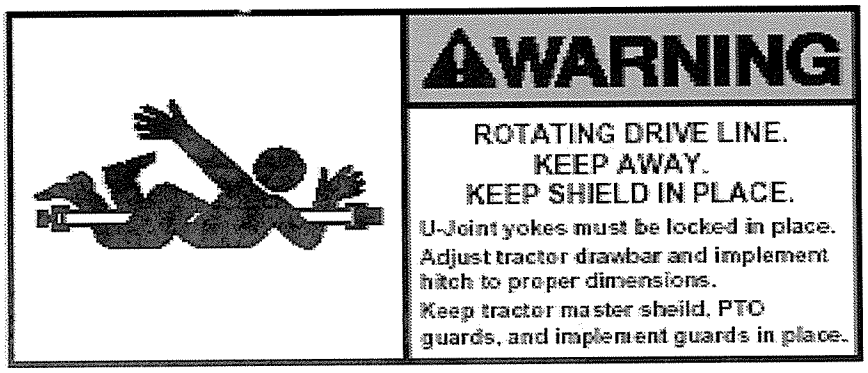

1. Connect the PTO shaft to the Ag-Bagger®. (a) depress the PTO shaft locking pins, (b) slide the yoke over the Ag-Bagger® gearbox shaft until the locking pins snap into place, (c) pull on the PTO shaft, it should not come loose from the Ag-Bagger®, (d) check that the PTO shaft telescopes easily and that the shield rotates freely.

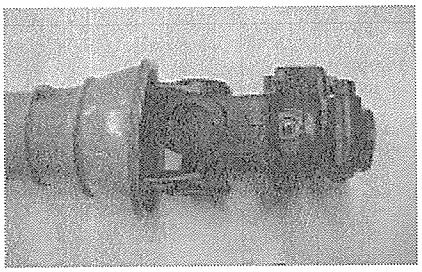

Bagger End

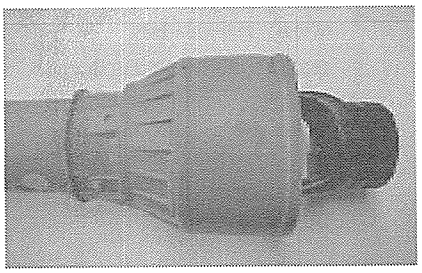

Tractor End

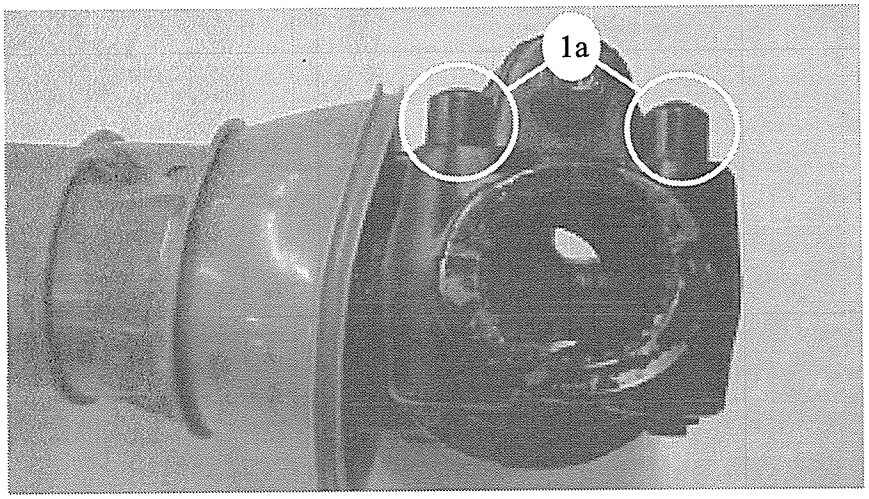

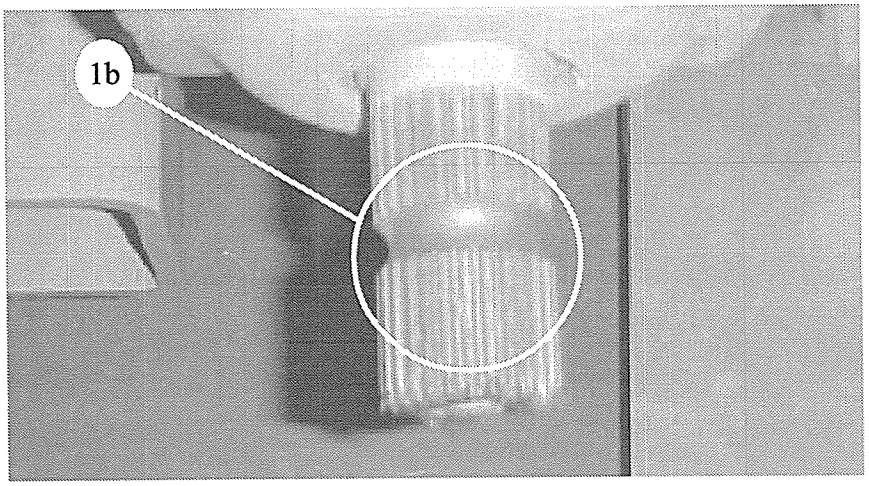

HOOK UP THE PTO SHAFT (CONT.)

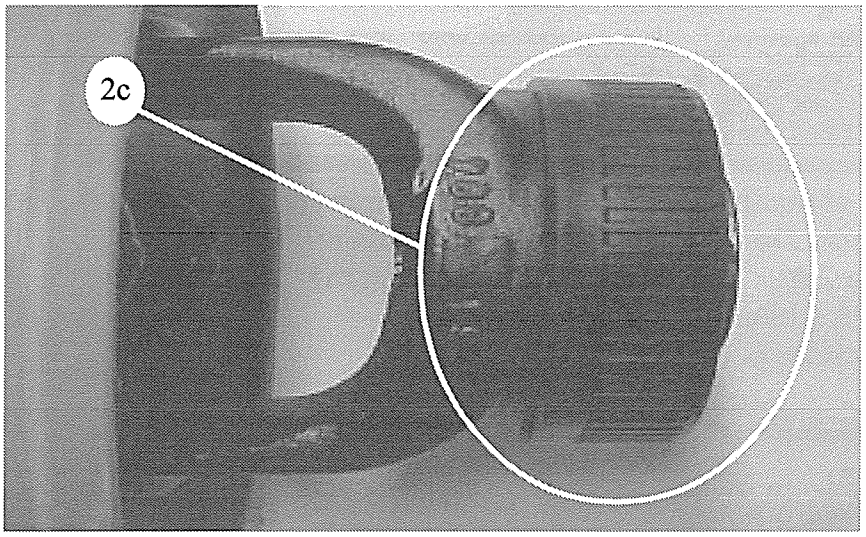

2. Connect the PTO shaft to the tractor. (a) back the tractor into place and shut off power. (b) lower the PTO shaft down to the back of the tractor, (c) rotate the u-joint yoke collar located on the tractor end of the PTO shaft, (d) slide the yoke onto the tractor PTO and release the collar to lock the yoke, (e) pull on the PTO shaft, it should not come loose.

3. Secure the PTO shaft. (a) turn the shield, it must rotate freely on the PTO shaft, (b) attach the safety chain, allow adequate slack for turns.

PRE-OPERATION CHECK LIST

The pre-operation check list is provided for both personal safety and maintaining the mechanical condition of the Ag-Bagger®. Make sure each item in the list is complete prior to operating the Ag-Bagger® each time.

☐ The tractor is adequate to operate the Ag-Bagger®.

☐ Lubricate, grease and check fluid levels. See the Service and Maintenance Section.

☐ Check Inoculant applicator, make sure it is connected and has been filled.

☐ Check all hydraulic lines, hoses and fittings for leaks and tightness. Wipe any dirt from the hose couplers with a clean cloth before connection to the hydraulic system of the tractor.

☐ Tractor is properly attached to the Ag-Bagger®.

☐ The PTO shaft is secure to the Ag-bagger® and the tractor shaft guards are in place.

☐ Safety shields and guards are closed and secured in place.

☐ Check the rotor, conveyor, and hopper to make sure no foreign object(s) are present.

☐ Check conveyor chain for correct tension.

☐ If the tunnel extension is being used; is it properly installed?

SET THE CONVEYOR

NOTICE

Possibility of equipment damage. Do not operate the conveyor lift while the safety chain is locked.

WARNING

Warning, Pinch Point. Stay clear while moving the conveyor.

Manually

1. Unhook the safety chain. This may require that you raise the conveyor slightly to unhook the safety chain. Use the procedure outlined in item 2a to accomplish this.

2. Lowering the conveyor. (a) Crank the winch counter clockwise to release pressure against the winch release lever, (b) press the lever, (c) crank the winch counter clockwise until the top of the conveyor is near the hopper center, (d) release the winch lock lever.

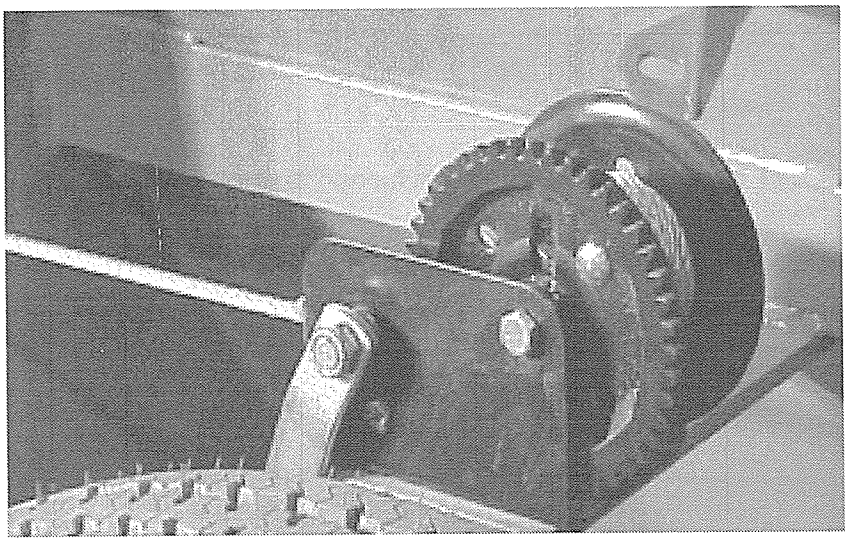

SET THE CONVEYOR (CONT.)

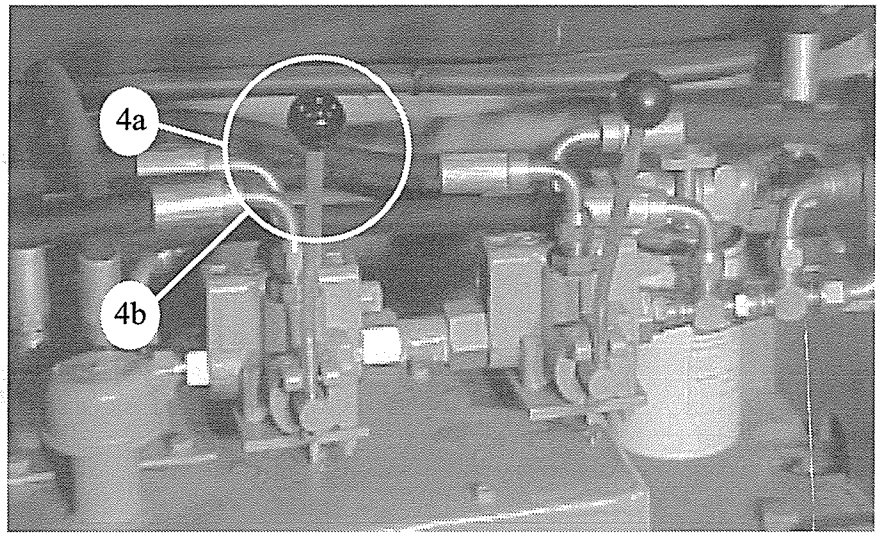

Double Valve system

Using Hydraulics

3. Unhook the safety chain. Use the valve on the left. This may require that you raise the conveyor slightly to unhook the safety chain. You will not be able to set the hydraulic conveyor until the PTO is engaged.

4. Lowering the conveyor: (a) Pull the handle towards you to raise the conveyor slightly if needed to unhook safety chain, (b) Push the valve handle forward (away from you) to lower the conveyor.

USING THE HYDRAULIC VALVES

Single Valve

The single valve system is used for operating the (a) Cable Rewind (push) and (b) conveyor speed control (pull).

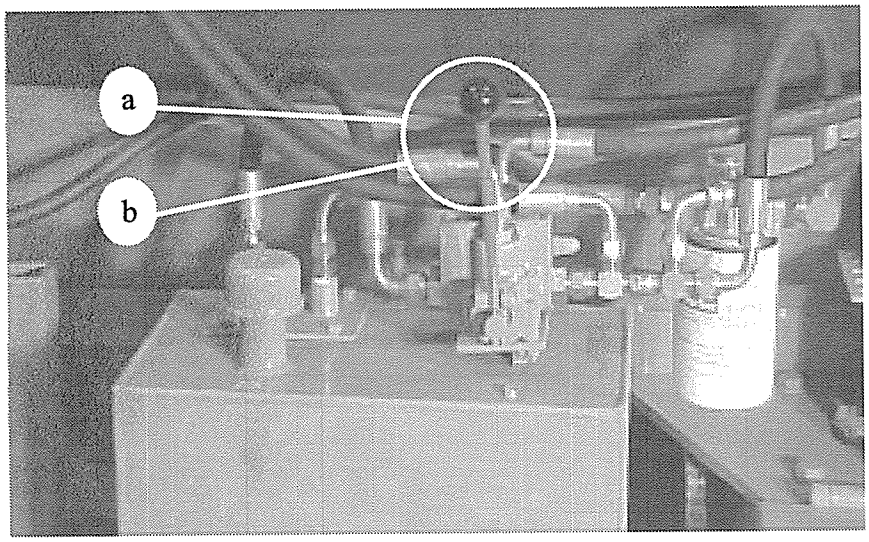

Single Valve

Double Valve

Controls are used as follows:

Left: Raises and lowers conveyor (a) push lowers, (b) pull raises.

Right: (c) push operates Cable Rewind (d) pull controls conveyor speed.

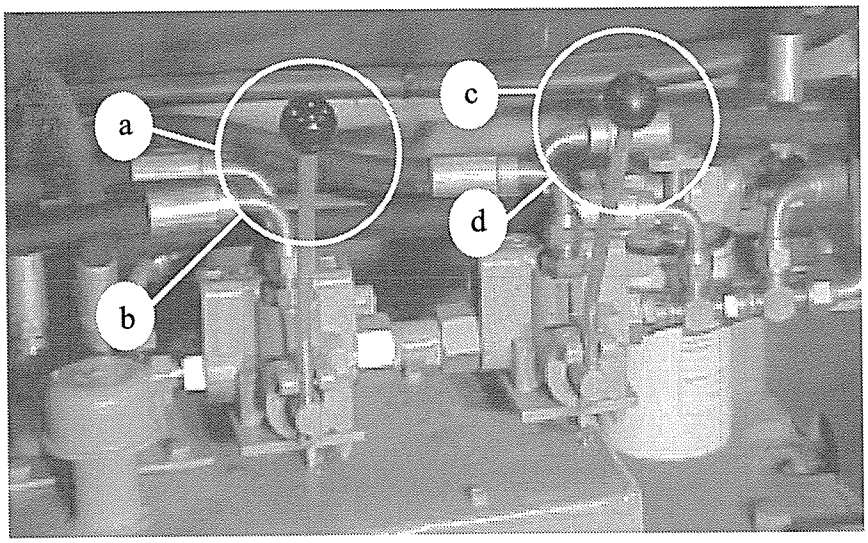

Double Valve

BEGIN BAGGING

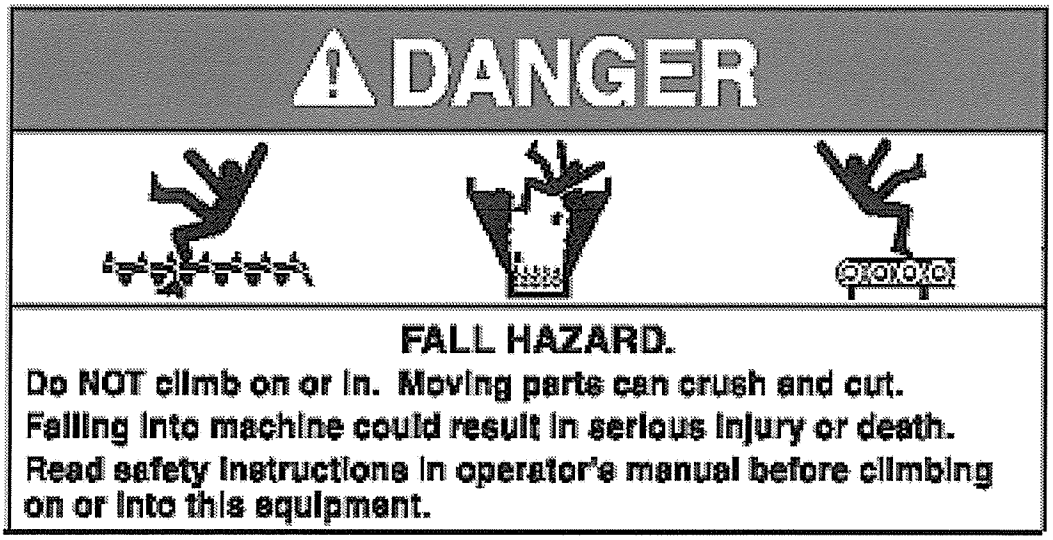

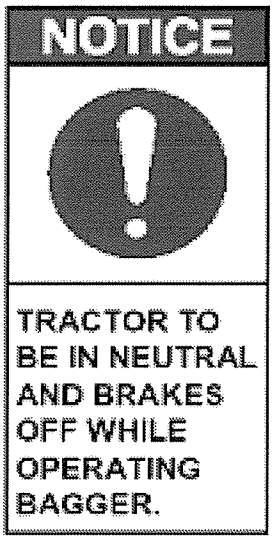

1. Instruct all unloading personnel how to communicate with the Ag-Bagger® operator.

2. Using the Hydraulic Hand Pump, set the cable drum brake pressure. Starting pressure may vary depending on type of product and moisture levels. The average starting brake pressure setting is between 800 - 1000 psi.

3, Engage the tractor PTO. Refer to the tractor operator manual.

4. Start the conveyor. Engage the tractor hydraulic controls or use the valve handle.

5. Place the tractor in neutral and release the tractor brakes.

6. Start unloading product onto the conveyor.

7. Turn the inoculant applicator "on" to begin inoculating. Contact your Ag-Bag® Dealer for proper inoculant settings.

BEGIN BAGGING (CONT.)

8. Check the cable drum brake pressure.

- The stretch bars on the side of the bag must not exceed 5 ½ inches.

- Never let the bag touch the cables.

9. Stop the conveyor when:

Two or three wraps of cable remain on the cable drum

Or

- The bag is full and 10 to 12 feet of the bag is left on the tunnel, approximately 4 folds in most cases.

10. Turn "off" the inoculant applicator.

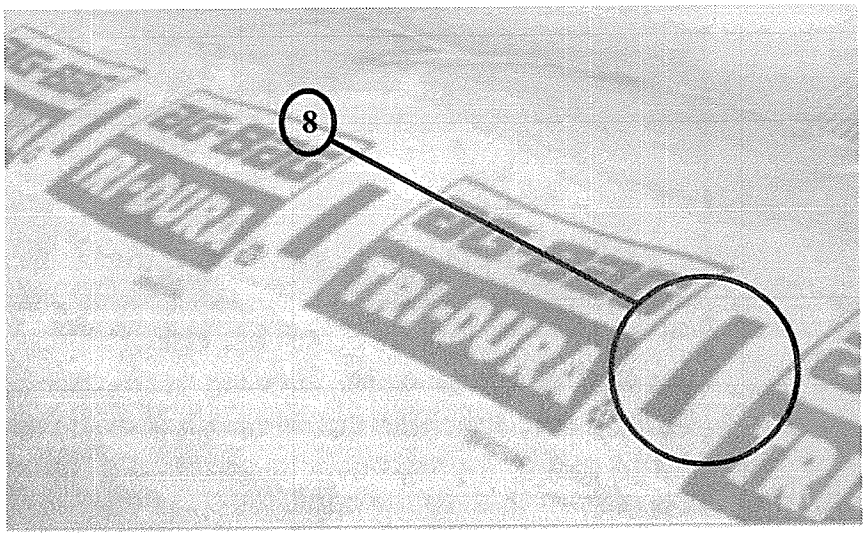

NOTICE

Possibility of bag damage. Place cardboard between the bag and cables if contact will or has occurred.

TUNNEL CLEAN-OUT PREPARATION

1. Using the release valve on the Hydraulic Hand Pump slightly release the cable pressure and move the Ag-Bagger® forward about two feet. Do not allow the bag to settle on the backstop. Set the tractor brakes.

2. Send more product through the hopper to help loosen the packed tunnel.

REMOVE THE BACKSTOP

WARNING

Possibility of serious Injury. Use caution and equipment capable when moving back-stop.

1. Place at least one Backstop foot in place to stabilize the backstop before proceeding.

2. Using the release valve on the Hydraulic Hand Pump, release the cable pressure. The Ag-Bagger® may move forward after the pressure is released. Do not allow the bag to settle on the backstop.

3. Unhook the cables from the backstop and move the backstop away from the bag.

4. Place the cables into the cable rewind guides.

5. Rewind the cables. Use the hand crank or the hydraulic cable rewind. Stop the cable end a few inches from the rewind guides.

REMOVE THE AG-BAGGER® FROM THE BAG

1. Pull the Ag-Bagger® forward. The bag will slide off the tunnel. Grab each side of the bag on the end. Walk the bag over itself pulling the product together. Bring the bag end back forward.

2. Seal the end of the bag with either MasterSeal® or double knot tie.

"No matter what method is used when sealing the end of the bag, loose plastic should be weighted down." See the Bagging and the Terrain Section. (Section 5)

RETURN THE CONVEYOR TO TRANSPORT POSITION

1. Raise the conveyor by (a) cranking the winch clockwise, the winch should lock when the handle is released, or (b) pull the valve handle towards you to raise the conveyor.

2. Hook the safety chain in the chain lock.

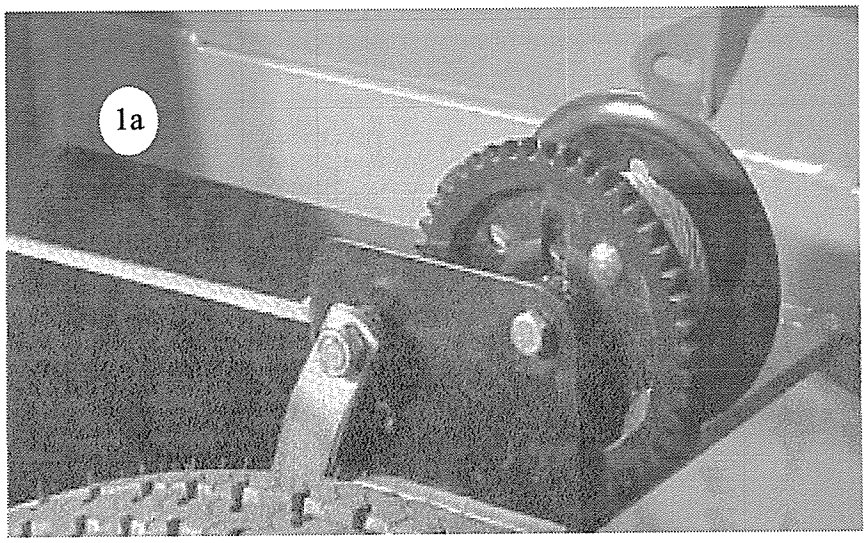

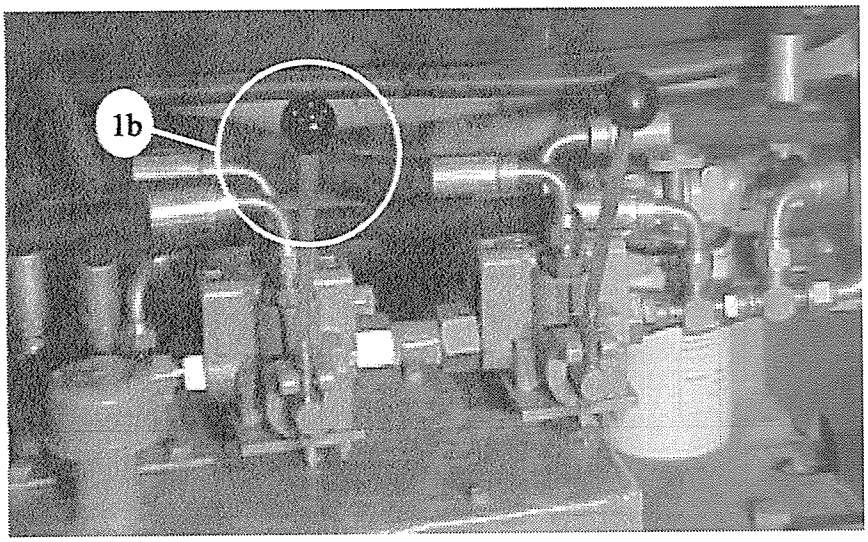

CLEAN OUT THE TUNNEL

1. Disengage the Tractor PTO.

2. Remove excess product from the tunnel. If this is your last bag, prepare the Ag-Bagger® for storage. See the Service and Maintenance section.

UNHOOK THE TRACTOR

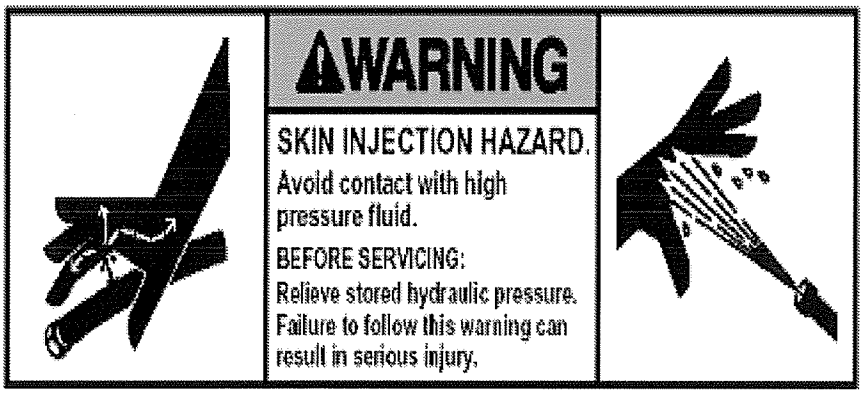

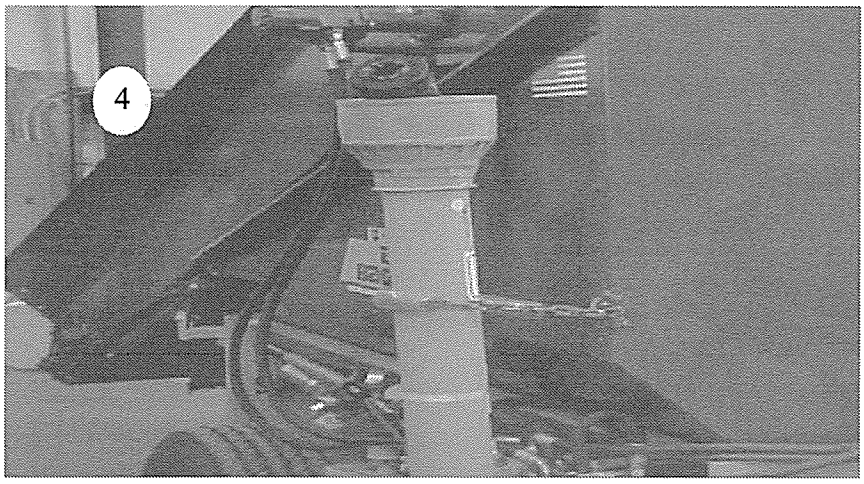

Turn the tractor off and wait for all moving parts to stop before proceeding.

1. For models that do not have self contained hydraulics disconnect the hydraulic hoses from the tractor.

2. Disconnect the inoculant applicator electrical connection from the tractor.

3. Disconnect the PTO shaft from the tractor

- Rotate the PTO shaft collar on the tractor end.
- Slide the PTO shaft towards the Ag-Bagger®.

4. Store the PTO shaft.

- Lift the PTO shaft towards the Ag-Bagger®.
- Wrap the PTO transport chain around the PTO shaft and hook it in the chain lock.

5. Unhook the tow hitch from the tractor.

UNHOOK THE TRACTOR (CONT.)

o Rotate the lift jack into the operation position and jack up the Ag-Bagger®.

o Pull the tractor hitch pin when the tow hitch is no longer touching the tractor drawbar.

6. When all the disconnections have been made, drive the tractor away from the Ag-Bagger®.

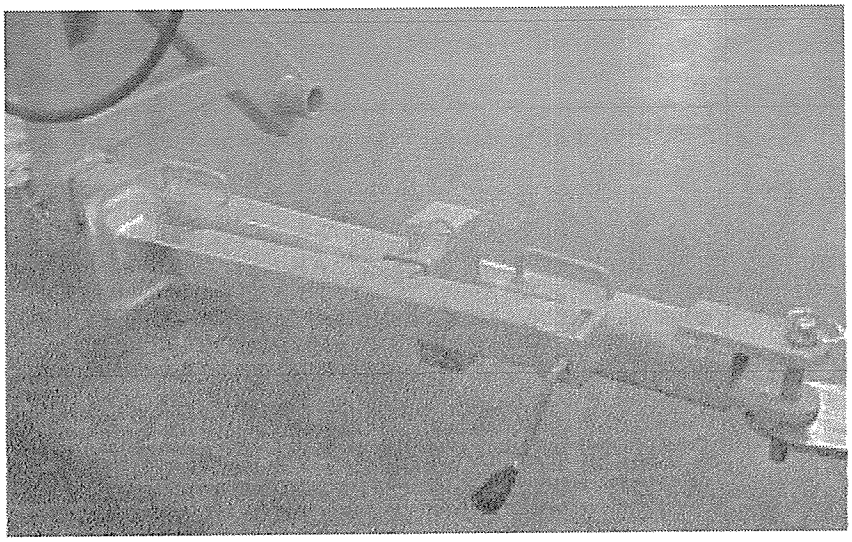

CHANGE THE WHEELS TO TRANSPORT POSITION

Move The First Wheel

1. Pull the jack stand foot pin.

2. Crank the lift jack up until the jack stand holes line up. Insert the pin and hairpin.

3. Lower the lift jack and remove it from the tow hitch.

4. Move the tow hitch and lift jack to the towing position. Make sure all locking pins are in place. Jack up the Ag-Bagger® until the wheel closest to the tow hitch is off the ground. Reset the jack stand. Remove the wheel assembly and place it in the wheel socket under the conveyor, secure it with the pin and hair pin.

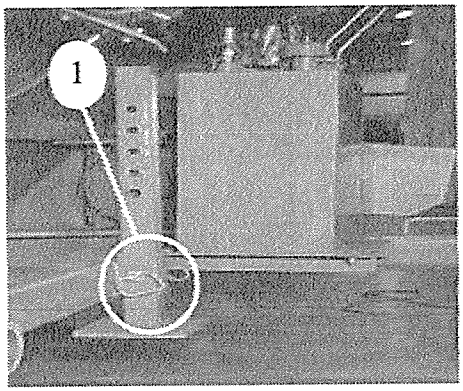

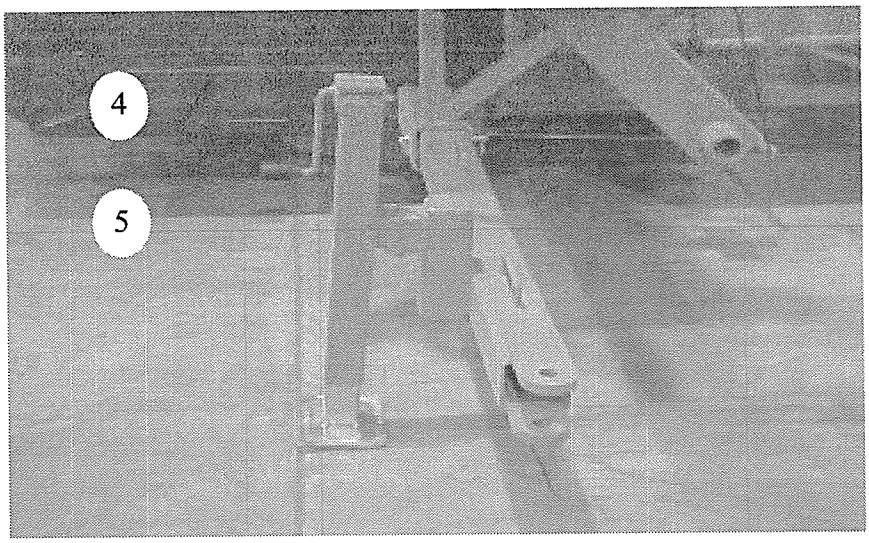

CHANGE THE WHEELS TO TRANSPORT POSITION (CONT.)

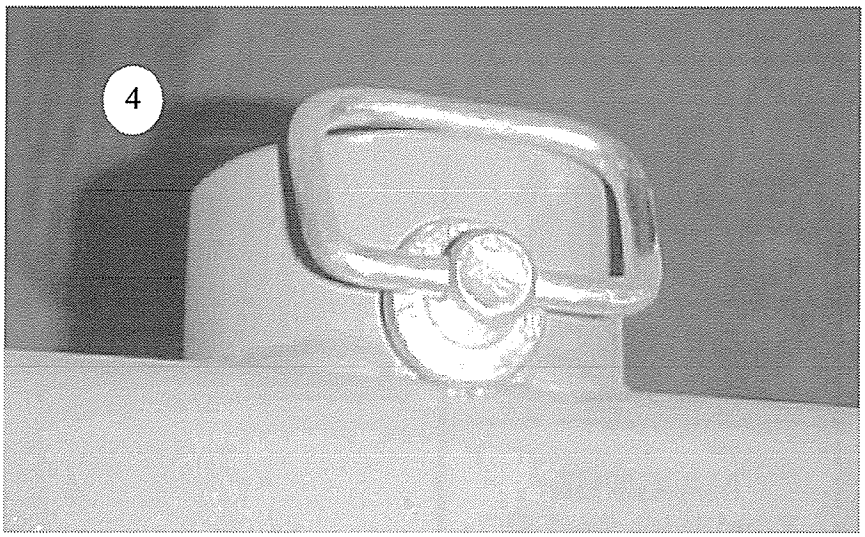

Wheel lock Conveyor Side

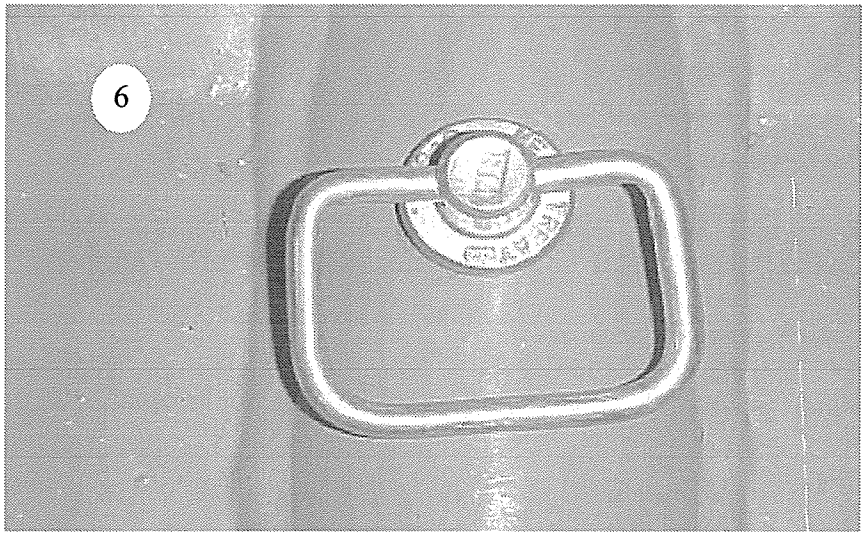

Wheel Lock Tunnel Side

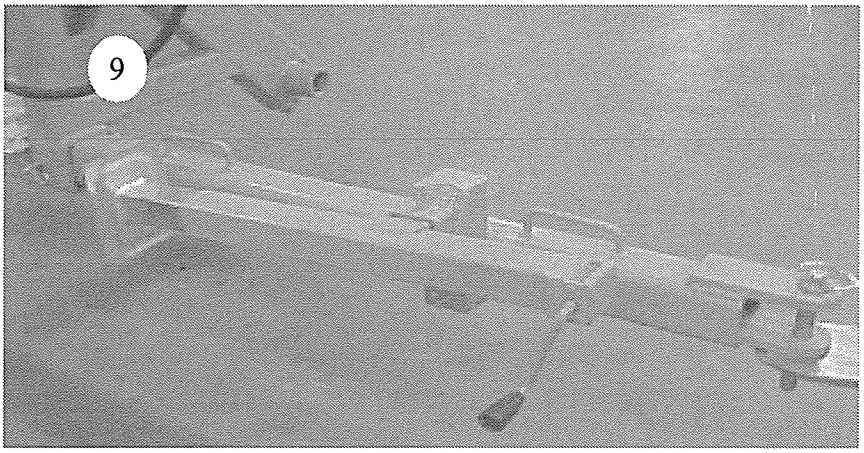

Move the Second Wheel

5. With the jack stand in the same position lower the lift jack until the wheel at the other end of Ag-Bagger® lifts off the ground.

6. Remove the wheel assembly from the socket and move it to the socket in the tunnel. Secure the wheel with the pin and hair pin.

7. Jack the Ag-Bagger® back up again.

8. Raise the support foot and secure it with the pin and hairpin.

9. Connect the towing vehicle. Refer to the transport information in the Safety Features and Warnings section 1. Lower the lift jack and turn to the transport position.

SECURE THE AG-BAGGER® FOR TRANSPORT

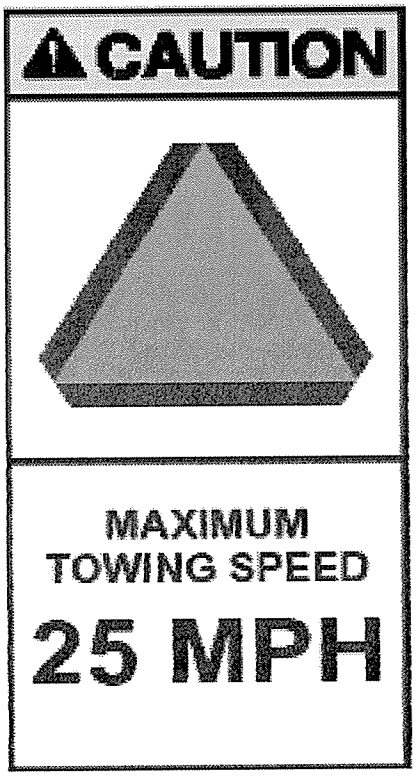

1. Lock the backstop supports in the tunnel sockets.

2. Connect the slings to the backstop and cables. Secure the backstop in the supports. Manually rewind the cables until the backstop is tight against the tunnel. Set the cable drum brake pressure.

3. Secure the top of the backstop with the shipping bracket.

4. Fasten the bag boom hook around the cable drum shaft and crank the bag boom winch until the cable is snug.

5. Tie the bag cradle to the tunnel.

6. Tie the bag pan up against the tunnel floor.

7. The tunnel extension may need to be removed to transport on public road.

Index

This section deals with placing the bag and preparing the site for best results. Also covered is keeping the correct tension on the cables for best compactions. The information contained here will help you to protect your investment in the feed you bag. It is important you familiarize yourself with the information contained here as well as the information presented in the attached Appendixes.

Table of Contents

BAG GUARANTEE

We, at Ag-Bag®, can offer this unequaled guarantee because of our commitment to quality, years of experience as the leading manufacture of silage bags, and use of the latest plastic technology. We recognize that the quality and reliability of the bagging system is dependent on a team effort between Ag-Bag® and you, the customer. Our part of the teamwork is to provide you with a top quality silage bag.

AG-BAG®'S PART

Ag-Bag® guarantees our "Tri-Dura®" silage bags to be free of defects in workmanship and materials. If a properly packed bag should fail from a defect during normal useful life, Ag-Bag® will replace the bag without charge. If the feed in the damaged bag requires rebagging Ag-Bag® will replace the bag with the initial replacement bag discussed above plus one more bag, for a total of two bags.

THE CUSTOMER PART

Most of the factors that control the quality and reliability of the bagging system are in the customer's hands. These include choice of forage crops, harvesting, bagging location, moisture, packing, bagging machine operations, and maintenance and surveillance of bags

Ag-Bag® will provide instruction, recommendations and suggestions about these factors but cannot and does not guarantee the outcome. It is the responsibility of the customer to seek out the best information and to make his own decisions. The customer will be responsible for the profits or loss that results from the use of these products. See Ag-Bag® 3M's of Silage for recommendation of how to bag silage for proper techniques and guidelines.

BAGGING SURFACE

WARNING

Do not bag on a hillside. Tip-over or bag roll may result.

Bag uphill rather than downhill. Avoid bagging on a hillside. The Ag-Bagger® can drift and bags may roll.

Surface conditions may affect bagging quality and ability. Soft ground conditions will act as a brake and may cause the Ag-Bagger® to sink. A hard clean and level surface is best to bag on. By clearing the area rodent problems can be eliminated.

BAD WEATHER BAGS

NOTICE

Remember, place bags in a locations that feed out can be done when you need the feed.

Consider the surface conditions during the seasons when product will be removed from the bags. If you expect a lot of mud, you may want to put some bags on a solid surface. Have enough accessible bags to last until good weather conditions can be expected.

PROTECT AGAINST THE WIND

NOTICE

Leaving loose plastic blowing in the wind may cause product loss. Secure both ends of the bag after sealing. Protect your investment.

Winds blowing against the plastic can cause plastic fatigue. This may create holes and allow oxygen into the bags. To prevent wind damage secure the loose ends of the bag.

- ☐ Pile old tires on the finished end of the bag after sealing.
- ☐ Do not use abrasive materials or forage products, rodents like this type of cover

BAG SHAPE

Keep the bag away from the cables. If it appears that the cables will contact the bag; insert a piece of cardboard between the bag and the cable.

Follow the instruction included in your Ag-Bag® bag box for bag stretch guidelines.

NOTICE

Overstretching the bag does void the bag warranty. Follow the guidelines for bag stretch included inside the Ag-Bag® box.

FILLING THE BAG

Haylage and Corn silage – Apply enough cable pressure to fill bag within 2-inches of the top of the tunnel. Keep the bags stretch bars under 5-1/2 inches.

Grains – grains tend not to fill the bag to the top of the tunnel, regardless of cable pressure. Regulate cable pressure by measuring your stretch bars 30-feet back from the Ag-Bagger. Keep the stretch bars under the 5-1/2 stretch limit.

CORRECTING BAG STRETCH

Tie heavy hex nuts to one end of a string and one hex nut to the opposite end of the string. Distance between nuts need to be:

- ☐ 19 feet 3 inches for 8 foot bags.
- ☐ 20 feet 3 inches for 9 foot bags.

The distances between nuts vary for wheatlage, rylage, and oatlage (small greens). Less cable drum brake pressure is required for these products:

- ☐ 19 feet for 8 foot bags
- ☐ 20 feet for 9 foot bags

Straddle the string over the bag 15 feet away from the Ag-Bagger.

While bagging, when the single nut touches the ground increase the cable drum brake pressure. If the nut comes off the ground more than 3 inches, reduce the cable drum pressure.

Use this procedure only as a visual aid. Remember, measuring the stretch bars on the bag and maintaining appropriate stretch dimensions is more important. Keep bag within stretch guideline mark of 5-/2 inches.

PRODUCT MOISTURE

Refer to the *"3M's of Silage"* for information on product moisture level. Moisture levels play an important part of product quality.

NOTICE

Over stretching the bag does void the bag warranty. Follow the guidelines for bag stretch included inside the Ag-Bag® box.

Dry Product

Dry product makes a lumpy bag. Long dry chop is hard on the Ag-Bagger®. Remember when trying to make good haylage, dry feeds have more resistance. They will pack higher in the bag, and less brake pressure is required.

Wet Product

Moisture levels above 70% may create excessive liquid in the hopper. This excessive liquid is "OK" unless the bag is outside the recommended shape. Slowly release brake pressure until the bag is within the recommended shape. Let the product wilt longer if liquid does not dissipate. Wet product does not rise very high in the bag. The result is a wide bag.

NOTICE

Possibility of bag damage. Place cardboard between the bag and cables if contact will or has occurred.

Index

This section is not intended to address all the problems that might arise during bagging. It is intended to review some of the common problems that might arise during the bagging operation. If a problem arises that is not covered here please contact your Ag-Bag® Dealer for help.

It is important to remember to follow all safety procedures while preforming any problem corrections outlined in Troubleshooting section.

PROBLEM	CAUSE	CORRECTION
ROTOR STOPS ROTATING, THE PTO SHAFT CONTINUES TO OPERATE	1. Shear bolt on the PTO shaft broke.	1a. Shut off the tractor. Replace the shear bolt 1b. Check for an obstruction in the hopper causing the shear bolt to break. Disconnect the PTO shaft and remove the object from the Ag-Bagger®. Check for further damage.
BAG DAMAGE	1. Abrasive objects are contacting the bag.	1a. Adjust operation or product condition to produce a better bag shape. Consult the *"3M's of Silage"* for more details. 1b. Place cardboard between the object and the bag. 1c. Check tunnel and tunnel extension for sharp areas.
THE CONVEYOR IS NOT SLIDING UP OR DOWN	1. Sticky or dirty track.	1a. Apply grease to the slide. Work the conveyor loose and slide it up and down to lubricate the entire slide. 1b. In dry sandy conditions, do not apply grease. Keep the track dry and clean. If grease is present clean the track.
THE CONVEYOR STALLED	1. Product builds up in the bottom of conveyor.	1a. Shut off the tractor. Open the Conveyor Clean-out Door and remove clogged product. Close door and resume operation. 1b. Check the pressure adjustment it may need to be increased. Consult your Dealer.

PROBLEM	CAUSE	CORRECTION
PRODUCT BUILDS UP IN THE HOPPER	1. The hopper was filled to fast	1. Slow down the amount of product to the hopper.
	2. Poor product condition.	2. See instructions in *"3M's of Silage"*.
	3. Product not feeding into bag.	3a. Check for wear on tine caps.
		3b. Check cabledrum break pressure. Adjust as needed.
MULTIPLE FOLDS OF THE BAG ARE SLIDING OFF TUNNEL	1. Bag pan does not have proper tension.	1. Tie knots in the bungee cords until proper spacing is obtained (about 3/4-inch) between bag pan and tunnel floor.
	2. Tunnel bungee cord not properly installed.	2. Check bungee installation. Make sure bungee is still hooked at both ends and that all tie strings are still in place.
CABLE DRUM BRAKE(S) JUMPING	1. Water condensation or other contaminant on the disc brake(s).	1. Check the disc and caliper for any water, rust, or other contaminants. Clean contaminants from system and resume operation.

The information provided in this section of the Operator's Manual is given for general information only. It is to help you to service and maintain the Ag-Bagger®. If more information is required contact your Ag-Bag® Dealer. By following these instructions the life of your investment will be lengthened.

STOP MACHINE AND TURN OFF ENGINE TO ADJUST, LUBRICATE, OR SERVICE.

Table of Contents

STOP MACHINE AND TURN OFF ENGINE TO ADJUST, LUBRICATE, OR SERVICE.

Machine Specifications

G6060-A

Width - Towing	8'6"
Width - Bagging	18'6"
Length - Towing	18'8"
Max Height	8'8" to 11'11"
Weight	6500#
Rotor Length	6'
Rotor Teeth	48
Max Bag Length	200'
Min HP	80
Max HP	120
Cable Length	200'

G6060-B

Width - Towing	8'6"
Width - Bagging	18'6"
Length - Towing	18'8"
Max Height	8'8" to 11'11"
Weight	6500#
Rotor Length	6'
Rotor Teeth	48
Max Bag Length	200'
Min HP	80
Max HP	120
Cable Length	200'

G6060-C

Width - Towing	8'6"
Width - Bagging	18'6"
Length - Towing	18'8"
Max Height	8'8" to 11'11"
Weight	6500#
Rotor Length	6'
Rotor Teeth	48
Max Bag Length	200'
Min HP	80
Max HP	120
Cable Length	200'

G6070-B

Width - Towing	8'6"
Width - Bagging	19'6"
Length - Towing	19'8"
Max Height	9'9" to 11'11"
Weight	7500#
Rotor Length	7'
Rotor Teeth	56
Max Bag Length	250'
Min HP	80
Max HP	120
Cable Length	250'

G6070-C

Width - Towing	8'6"
Width - Bagging	19'6"
Length - Towing	19'8"
Max Height	9'9" to 11'11"
Weight	7500#
Rotor Length	7'
Rotor Teeth	56
Max Bag Length	250'
Min HP	80
Max HP	120
Cable Length	250'

PB6000

Width - Towing	13'6"
Width - Bagging	18'6"
Length - Towing	18'8"
Max Height	8'8" to 11'11"
Weight	6500#
Rotor Length	6'
Rotor Teeth	36
Max Bag Length	200'
Min HP	70
Max HP	120
Cable Length	200'

STOP MACHINE AND TURN OFF ENGINE TO ADJUST, LUBRICATE, OR SERVICE.

Lubricant Specifications

Parts	Lubricants
Gearbox	EP 80/90 gear oil
Bearings, Shafts Slides	Grade #2 lithium complex EP grease
Hydraulic System	Grade 46 ISO
Hand Pump	Hydraulic Jack Oil
Planetary	SHC 85 140
Chain	See oil chart

Chain Oil Specifications

Apply the proper weight oil according to surrounding temperature.

Temperature Degree F	Recommended Lubricants
-20 - +20	SAE 10
20 - 40	SAE 20
40 - 100	SAE 30
100 - 120	SAE 40
120 - 140	SAE 50

STOP MACHINE AND TURN OFF ENGINE TO ADJUST, LUBRICATE, OR SERVICE.

Bolt Specifications

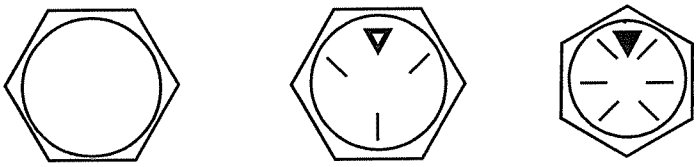

Not Graded Grade 5 Grade 8

Bolt Grade	Use - Torque
Not Graded	Used for shields and covers. Self taping. No Torque Specs
Grade 5	Used for most applications. No Torque Specs
Grade 8	Used on brake calipers only. No Torque Specs

Tire Specifications

Tire Size	Pressure - Torque
9.5L x 15 Farm Imp	Pressure Cold: 44 lbs Lut NutTorque: 75 - 85 ft lbs
LT 235/85r x 16	Pressure Cold: 80 lbs Lug Nut Torque: 75 - 85 ft lbs
LT 265/75R x 16	Pressure Cold: 80 lbs Lug Nut Torque: 75 - 85 ft lbs

STOP MACHINE AND TURN OFF ENGINE TO ADJUST, LUBRICATE, OR SERVICE.

Cable Drum Disc Brake(s)

NOTICE

Worn brakes can damage the cable drums. Replace worn brake pads

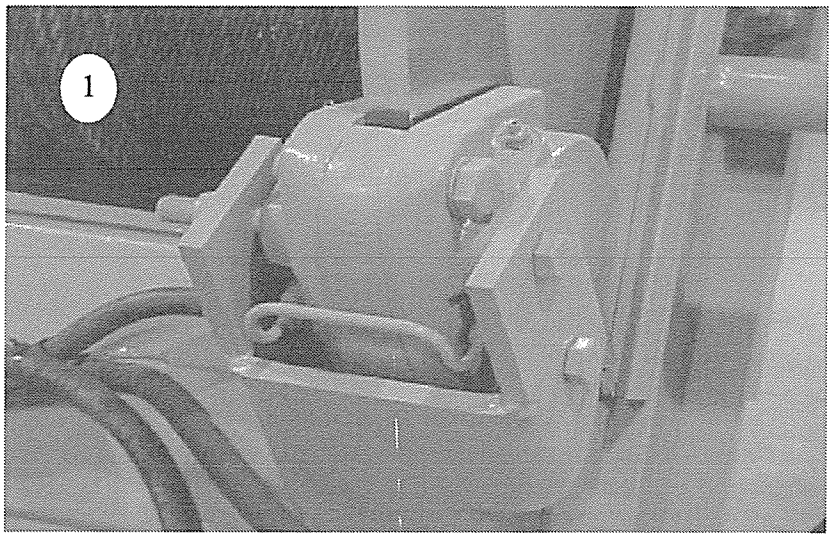

Keep the shields in place at all times. Keep the brake(s) clean and dry for correct operations.

1 Remove the shield and inspect the brake disc and pads. Replace brake pads if only a 1/8" remains. Brake pads may wear out over time.

2 Remove any contaminants from the brake disc contact surface

3 Replace all shields prior to operating the Ag-Bagger®.

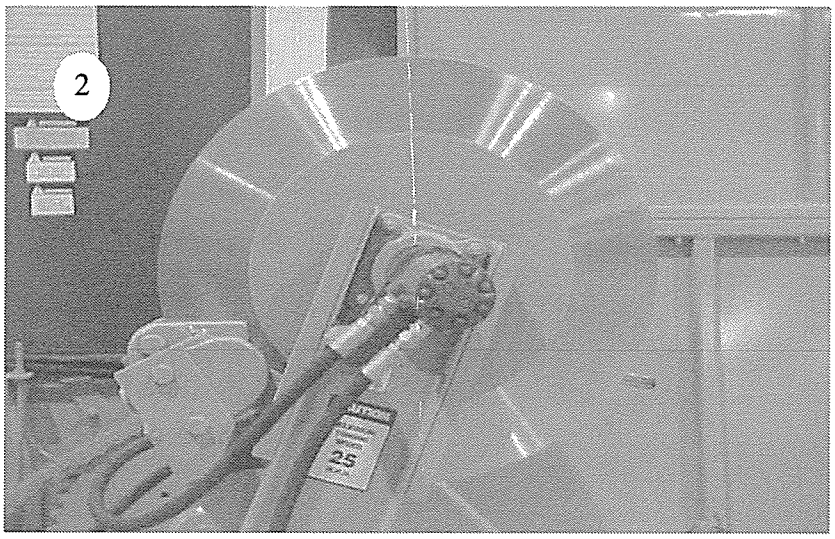

STOP MACHINE AND TURN OFF ENGINE TO ADJUST, LUBRICATE, OR SERVICE.

Rotor Bearings Lubrication

NOTICE

Grease rotor bearing 4 pumps per bag.

Your Ag-Bagger® is equipped with grease whips that are used to grease the Rotor Bearings. The grease whips are located at either side of the hopper near the frame. One is located on the (1) right side of the machine by the Chain Tensioner Adjuster. The other (2) is located on the frame below the conveyor lock. Please refer to the Lubricant Types section of this manual.

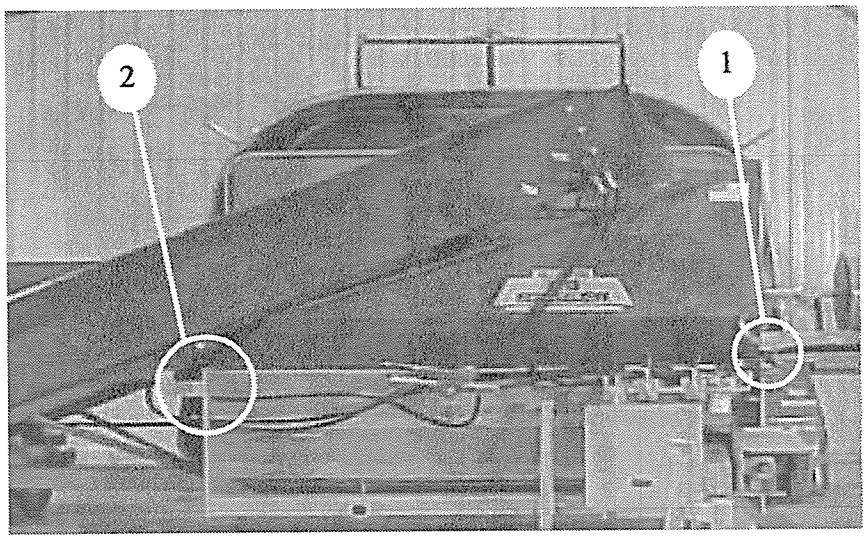

PTO Shaft Service

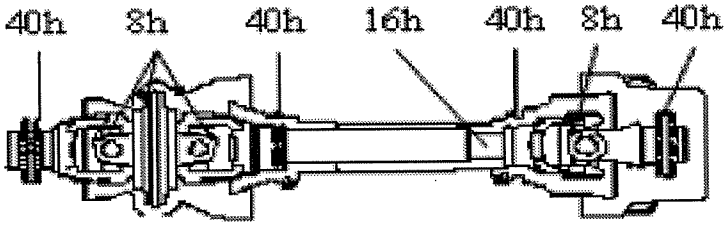

Safety shields will have to be removed before this service can be performed. See the illustration for lubrication schedule. Example 8h = every 8 hours. Turn the tractor off and remove the key before performing maintenance or contacting the PTO shaft.

Refer to the PTO shaft book supplied with the PTO shaft.

Remember to replace all shields before restarting the operation.

STOP MACHINE AND TURN OFF ENGINE TO ADJUST, LUBRICATE, OR SERVICE.

Rotor Chain Tension Adjustment

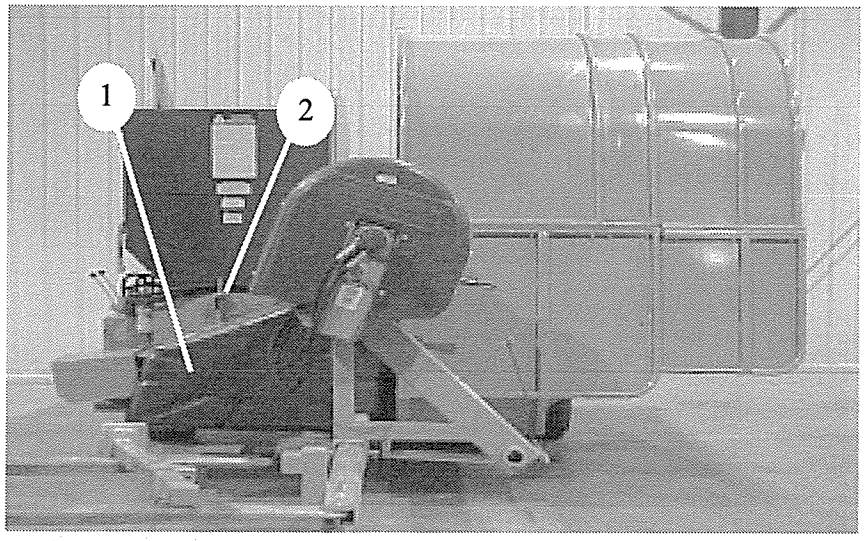

THESE ADJUSTMENTS CANNOT BE MADE WITH SHIELD IN PLACE.

Use the rotor chain adjuster to maintain and adjust tension on the Double 120 rotor drive chain. The rotor chain deflection needs to be 1/4". The measurement should be taken between the two sprockets as shown in (2). Use the following procedures to adjust the chain:

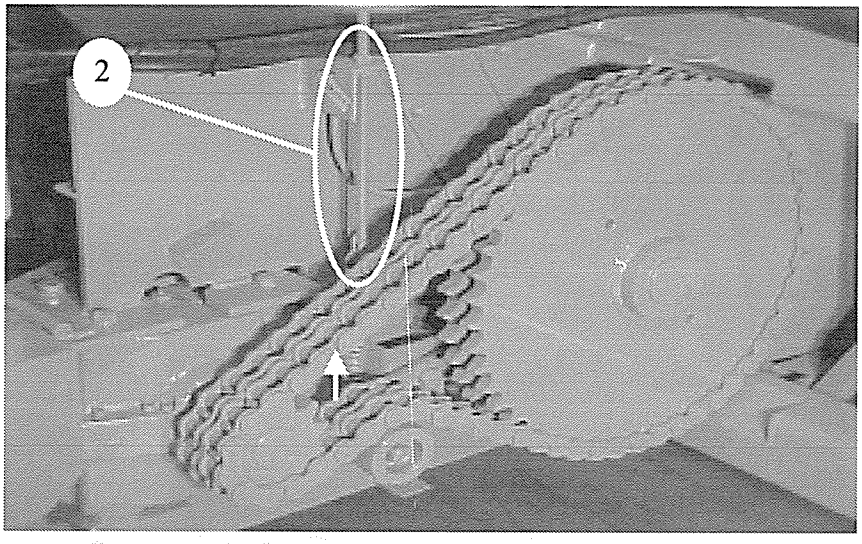

1 Remove shield covering the Double 120 chain and sprocket. This is located to the right hand side of the hopper.

2 Measure the deflection. Locate the tension adjusting rod. This rod contains two nuts and a threaded rod.

3 Use the nuts in conjunction with adjusting the chain. To tighten, loosen the lower nut (b) and tighten the upper nut (a). The reverse is true if you want to loosen, back off the upper nut (a) and then snug up the lower nut (b). When adjustments are complete make sure both nuts are again brought tight against the bracket (c).

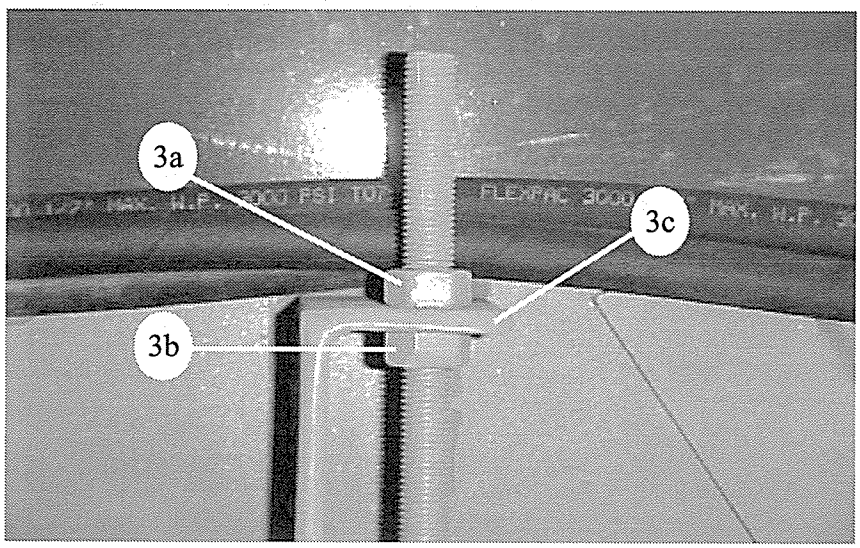

REPLACE ALL SHIELDS WHEN ADJUSTMENT IS COMPLETE

STOP MACHINE AND TURN OFF ENGINE TO ADJUST, LUBRICATE, OR SERVICE.

Cable Drum Shaft Bearing Lubrication

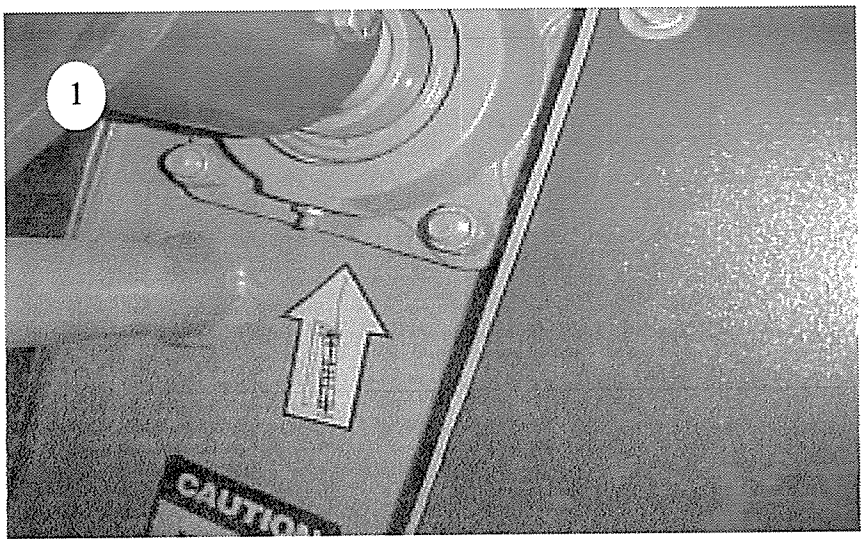

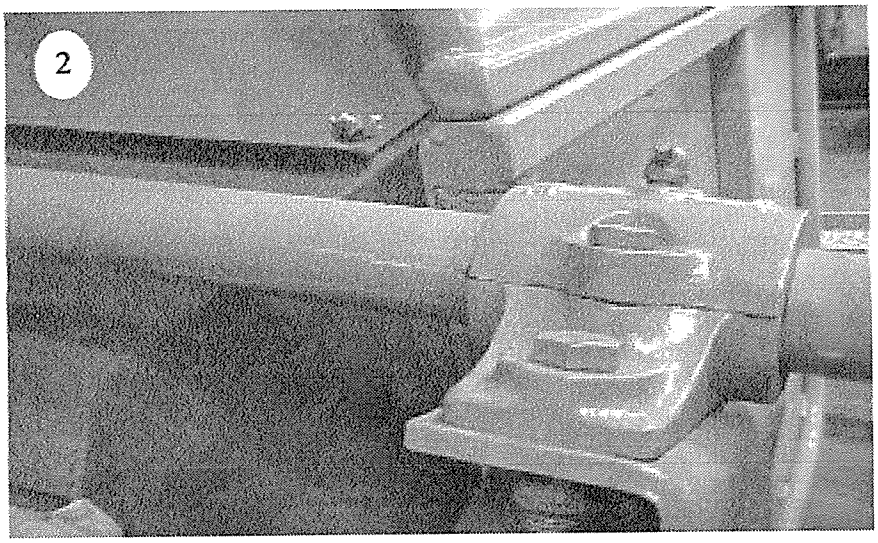

Four bearings are located along the cable drum shaft. One bearing is located on each side of the cable drum (1) is located on the outside of the drum at both ends, and (2) is located on the inside of the drum.

Using the recommended grease from the lubricant table, grease each bearing every three bags.

Be sure to wipe away excess grease when completed.

Conveyor Chain Guide Adjustment

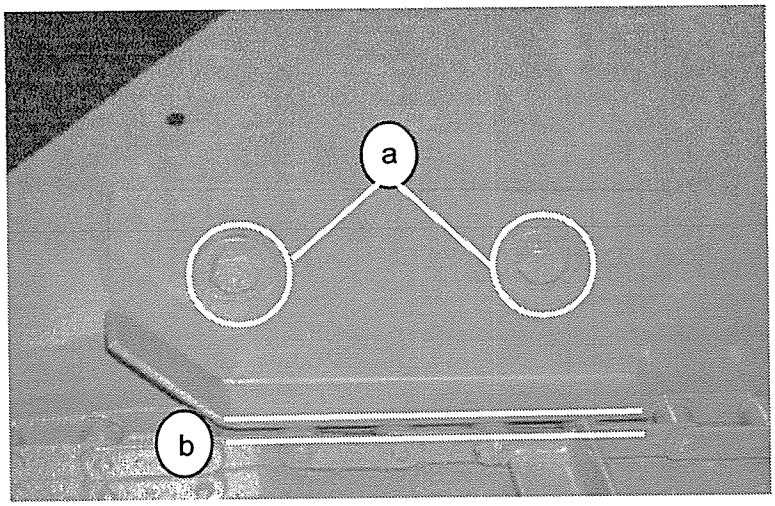

Using two 3/4" wrenches loosen the nuts (a) holding the guide. Loosen only enough to be able to move guide up and down. The nuts are located on the exterior of the conveyor.

Move the guide up or down until the clearance (b) between the guide and the conveyor chain is about 1/8". This clearance should be the same along the entire length of the guides, retighten nuts.

STOP MACHINE AND TURN OFF ENGINE TO ADJUST, LUBRICATE, OR SERVICE.

Conveyor Service

CONVEYOR SLIDE

The conveyor slide is located on either side of the conveyor. Use the following as a guide for service and maintenance:

In rust prone areas, apply grease to slides 1 or 2 time per season. Use the grease recommended in the Lubricant Chart.

In dry sandy conditions, do not apply grease, keep the track dry and clean

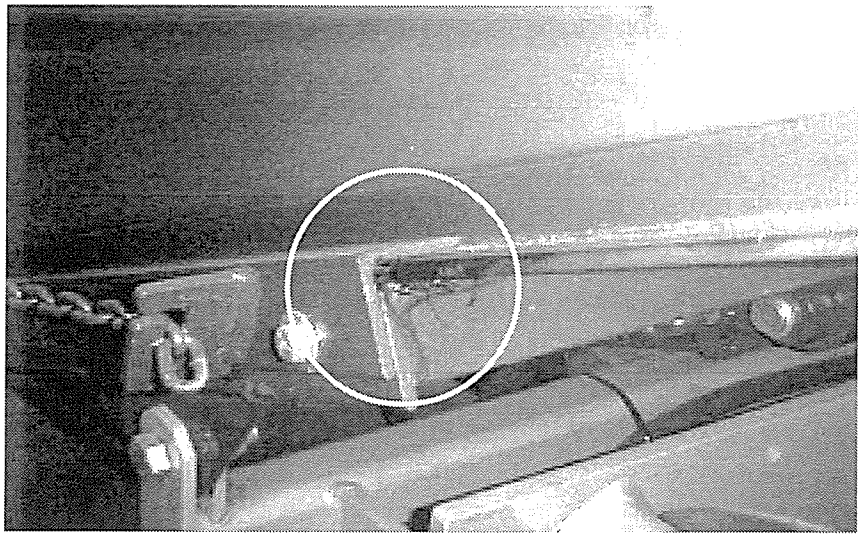

CONVEYOR CHAIN TENSION

The lower end of the conveyor will adjust to maintain correct chain tension. Correct conveyor chain deflection is 2" at the middle of the conveyor. Follow the below procedure to adjust the chain;

1 Loosen the nuts and bolts on both side of the conveyor.

2 Turn the adjusters on both sides an equal number of turns until proper deflection is obtained.

3 Tighten the nuts and bolts on both sides.

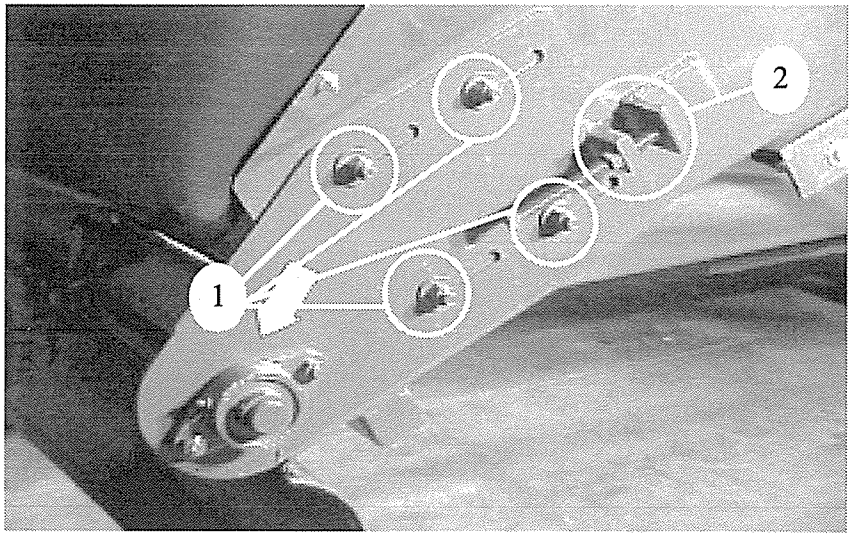

STOP MACHINE AND TURN OFF ENGINE TO ADJUST, LUBRICATE, OR SERVICE.

Conveyor Service (cont.)

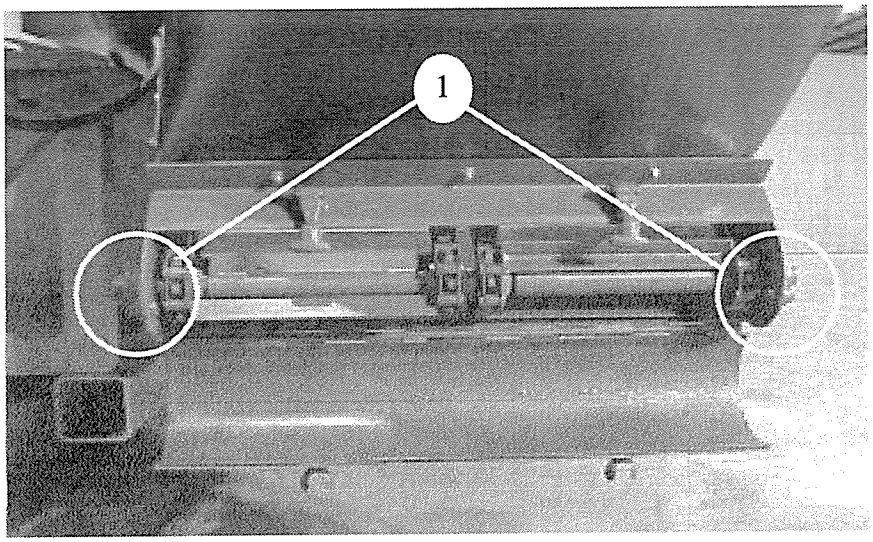

CONVEYOR IDLE AND DRIVE SHAFT BEARINGS

Grease the bearings as follows using the lubricant recommended in the Lubricant Chart:

1 The 2 idle shaft bearings are located on either side of the lower end of the conveyor. Grease zerks are located directly on the bearings.

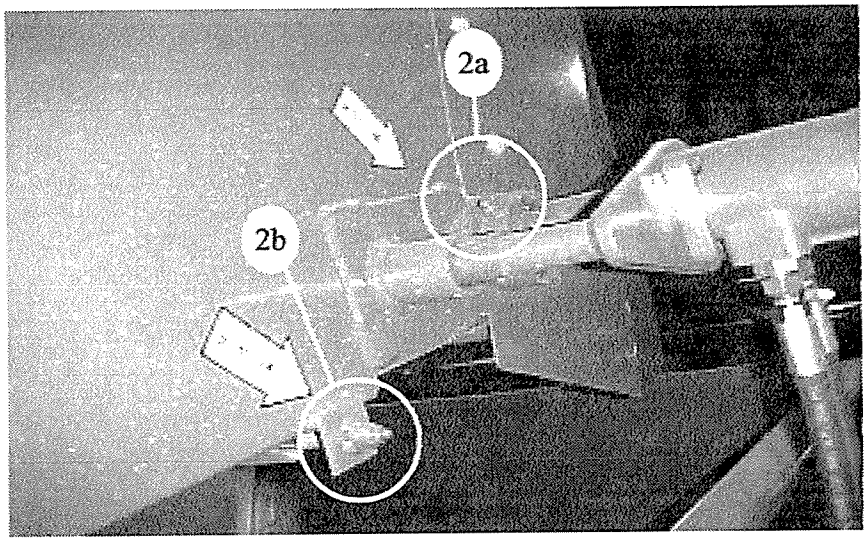

2 The 2 drive shaft bearings are located on either side of the upper end of the conveyor. One grease zerk is located directly on the bearing (a) while the other is serviced via a grease whip (b) locate on the bottom of the conveyor (see illustration to the left).

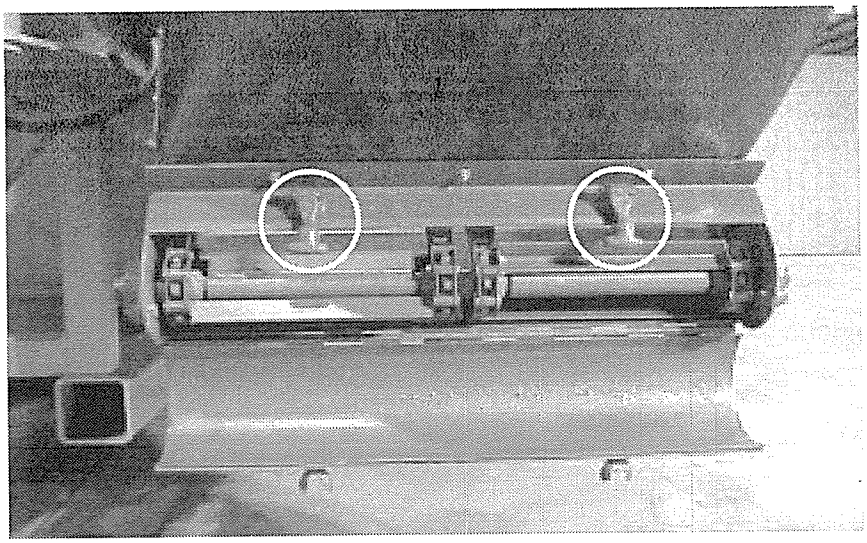

CONVEYOR CLEAN-OUT DOOR

The conveyor clean-out door is located at the lower end of the conveyor. Open it to remove built up product from the under side of the conveyor. Make sure the tractor is turned off and all motion on the Ag-Bagger® has stopped. Open the door by using the two hard rubber handles. When complete make sure door is secured before starting to bag again.

STOP MACHINE AND TURN OFF ENGINE TO ADJUST, LUBRICATE, OR SERVICE.

Cable Rewind Guide Shaft

Used to allow the Cable Rewind Guide to move freely back and forth during the rewinding of the cable, this shaft should be evenly greased, as needed, to allow the guide to move smoothly. Parts involved are (1) Cable Rewind Shaft and (2) Cable Rewind Guide.

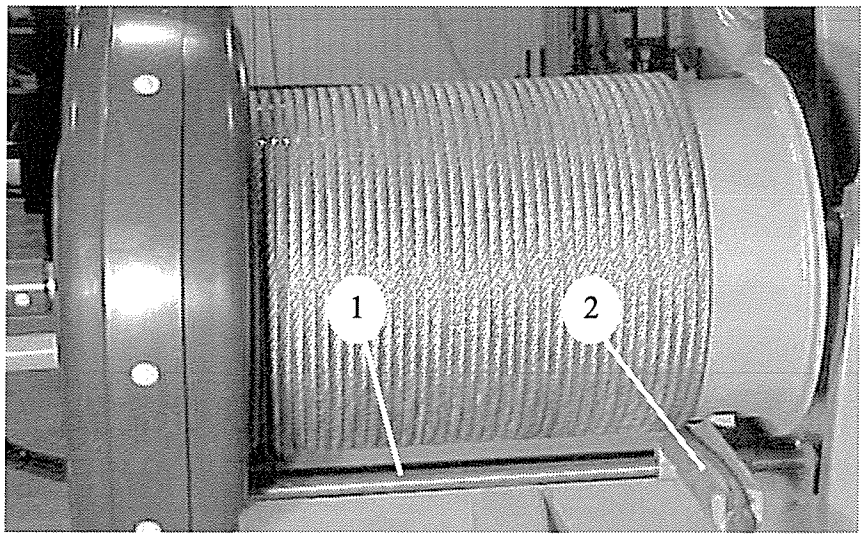

Cables

The 6000 series Ag-Bagger® is outfitted with 7/16" cables. Depending on the Ag-Bagger® and options ordered the cables on your bagger are either 200' or 250'. The cables are single wrapped on the drum for added safety and increased life. Although cables do not require much servicing they should be checked regularly for the following:

- ☐ Jaggers
- ☐ Kinks
- ☐ Cable has not begun to pull out of sleeve.

Replace damaged and weak cables prior to bagging. Apply a thin coat of grease or oil to cables prior to storage.

Remember, the cables should be removed from the cable guides during bagging, and placed back into the cable guides before starting to rewind the cables when finished bagging. Always wear protective gloves when handling the cables.

STOP MACHINE AND TURN OFF ENGINE TO ADJUST, LUBRICATE, OR SERVICE.

Wheel Bearings

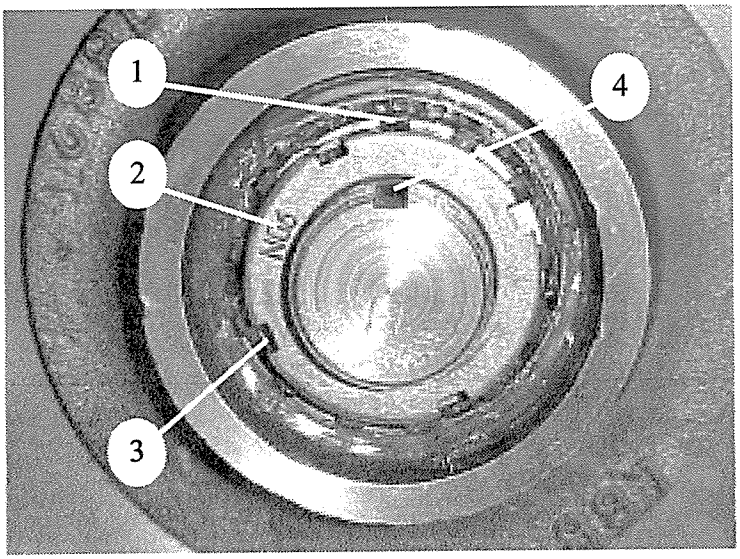

The Ag-Bagger® is equipped with roller bearings both inner and outer. Assure that when you pack the bearings, that you pack both bearings. Also inspect the inner and outer seals to make sure they are in good condition. Replace any and all parts as needed. This procedure should be done annually or more often if you are doing a large amount of highway travel. The bearing is held in place by a star lock washer (1) and a spindle lock nut. (2). Make sure the cog on the lock washer is in the keyway (4) when it is replaced, also insure that at least one of the stars (3) has been bent in to the slots provided on the lock nut.

Bag Boom Lubrication

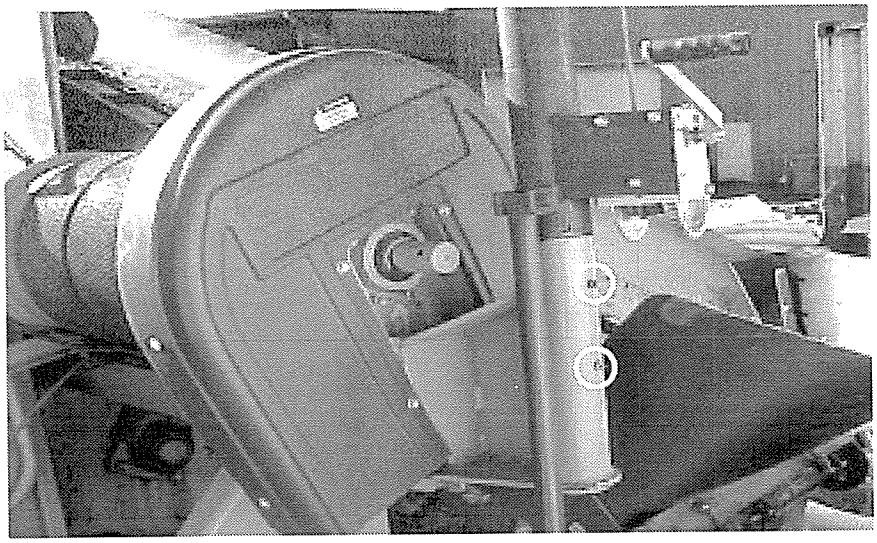

In order to insure the ease of operation you should grease the zerks located on the bag boom socket 2 to 3 times per season.

STOP MACHINE AND TURN OFF ENGINE TO ADJUST, LUBRICATE, OR SERVICE.

Pump Drive Chain Adjustment

ADJUSTING THE PUMP DRIVE CHAIN

The pump drive chain is located to the right of the hydraulic tank. You must remove the shield covering the drive chain. REPLACE THE COVER IMMEDIATELY AFTER SERVICING.

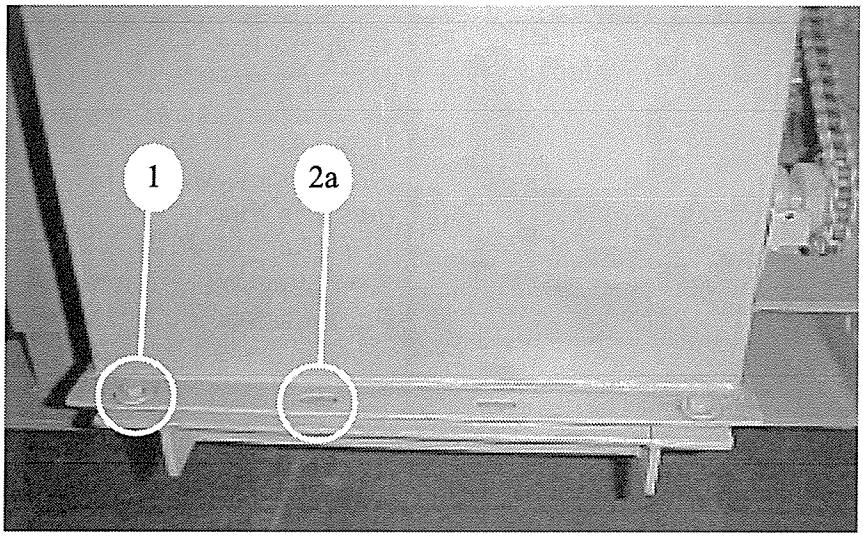

1 Loosen all 4 sets of nuts and bolts securing the hydraulic tank. These bolts are located on the front and back of the lower part of the tank.

2 Slide the tank along the (a) bolt slots to adjust the chain tension and alignment. The deflection for the chain is 1/8". Use a straight edge along both sprockets (b) to keep them in line with each other.

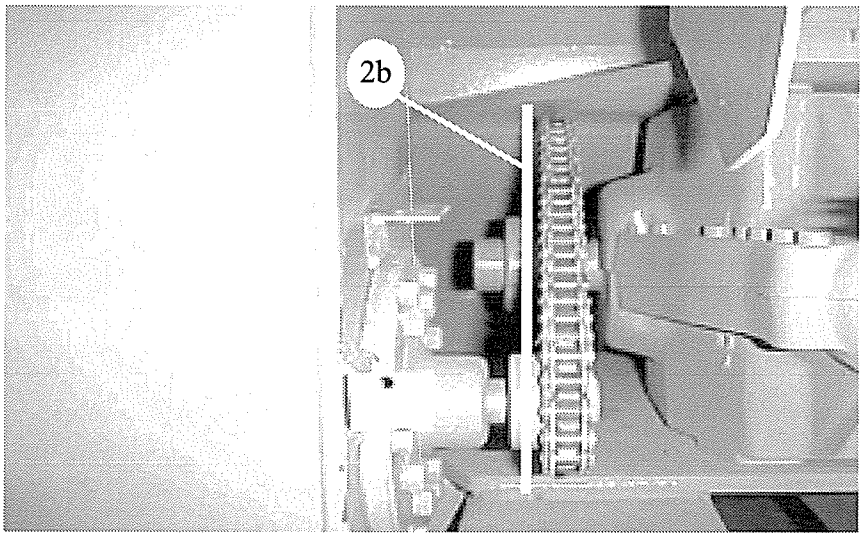

3 Tighten the nuts and bolts to secure the hydraulic tank

STOP MACHINE AND TURN OFF ENGINE TO ADJUST, LUBRICATE, OR SERVICE.

Hydraulic System

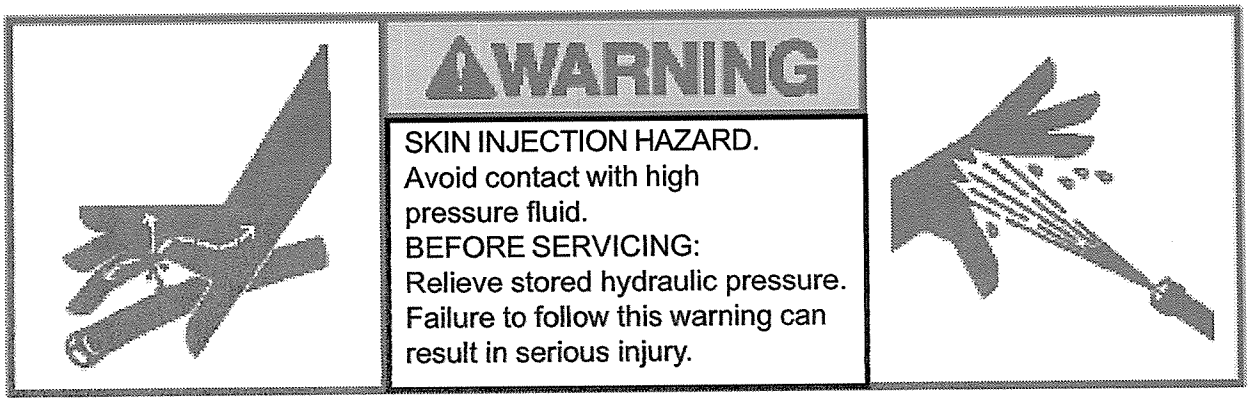

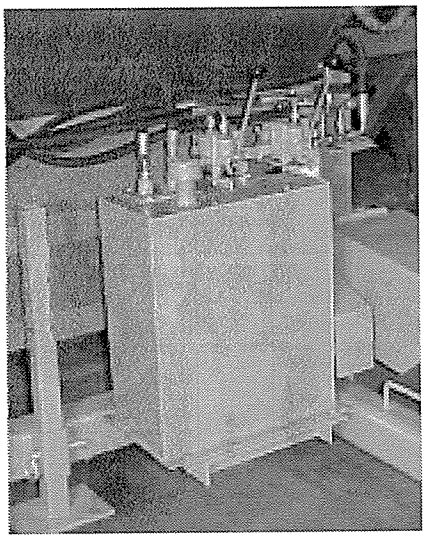

USE ONLY THE HYDRAULIC OIL RECOMMEND IN THE LUBRICANT TYPES SECTION OF THIS MANUAL

1 Check the hydraulic oil level before each operation. The tank needs to contain 8 gallons of hydraulic oil

2 Change the filter and all hydraulic oil every 12 months. Change more often in hotter climate. Use only recommended viscosity oil.

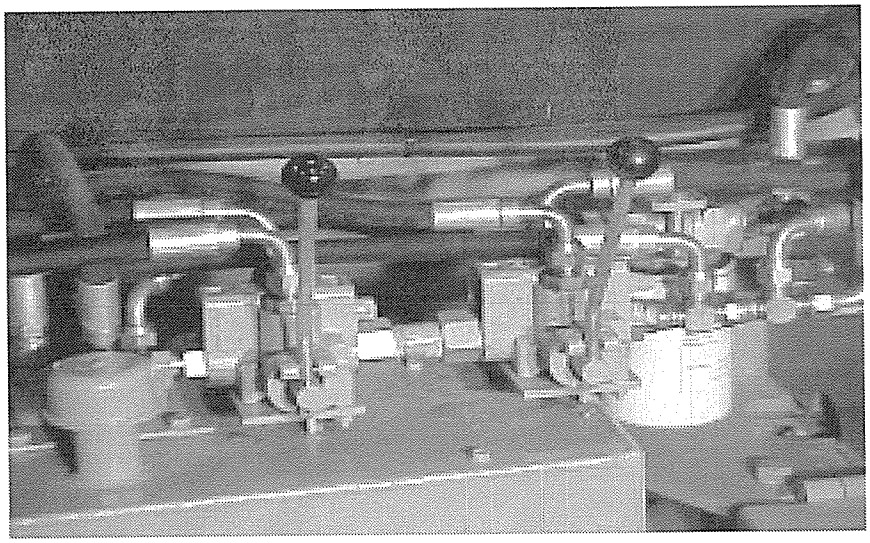

3 Check fittings and hoses for leaks. Do a visual inspection of these items. Before servicing any of these items be sure to relieve all pressure on the system. Insure that the tractor is off or the PTO shaft has been disconnected.

STOP MACHINE AND TURN OFF ENGINE TO ADJUST, LUBRICATE, OR SERVICE.

Hydraulic System (cont.)

HYDRAULIC HAND PUMP

The hydraulic hand pump, in conjunction with the pressure gauge, is used to control the brake pressure on the cable drums, even though it is used in conjunction with the brakes do not use brake fluid in this system. Brake fluid will cause the seals to deteriorate and the hand pump to fail The use of brake fluid will void the warranty on the hand pump. The following is the procedure used to service the hydraulic hand pump:

1 Release the hydraulic pressure

2 Remove the bolts from the frame.

3 Hold the pump horizontal

4 Open the filler plug.

5 Fill with oil until the oil level is at the bottom edge of the filler hole.

6 Close the filler plug.

7 Bleed the air out of the system.

NOTICE

Use only Hydraulic Jack Oil in the Hand Pump. The use of brake fluid will void the warranty.

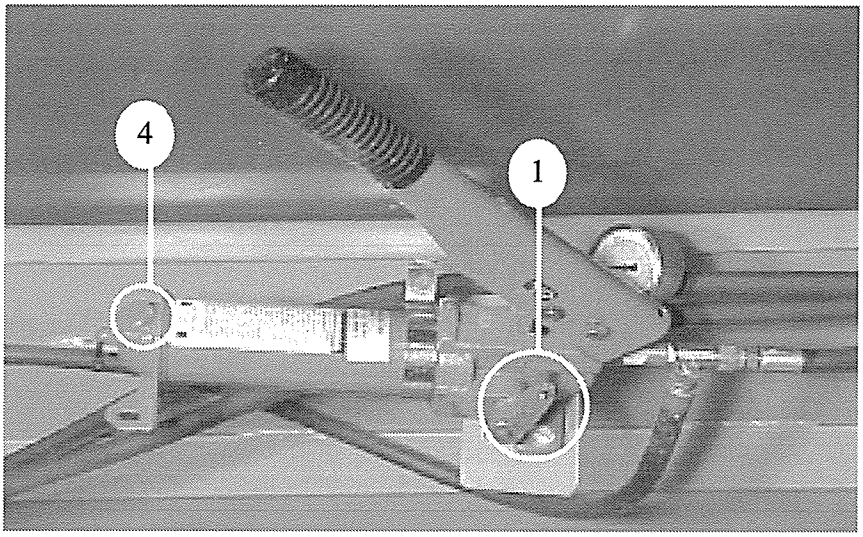

STOP MACHINE AND TURN OFF ENGINE TO ADJUST, LUBRICATE, OR SERVICE.

Gearbox

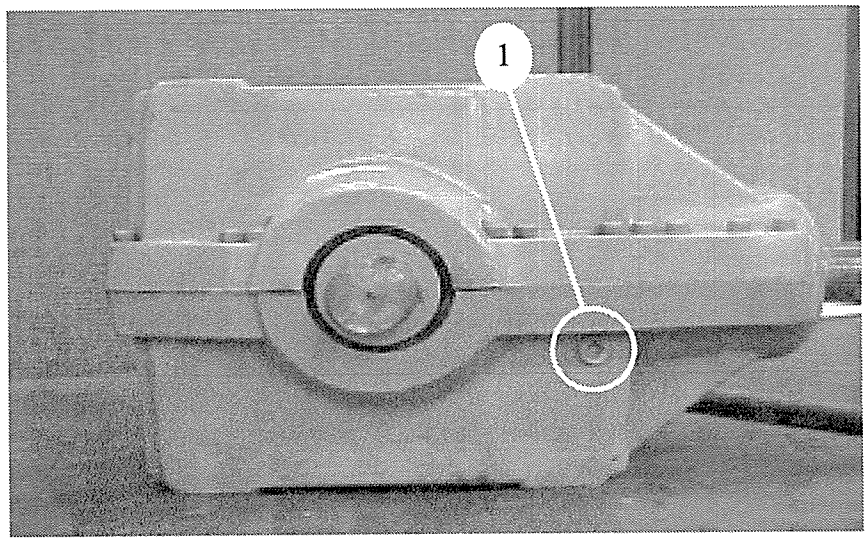

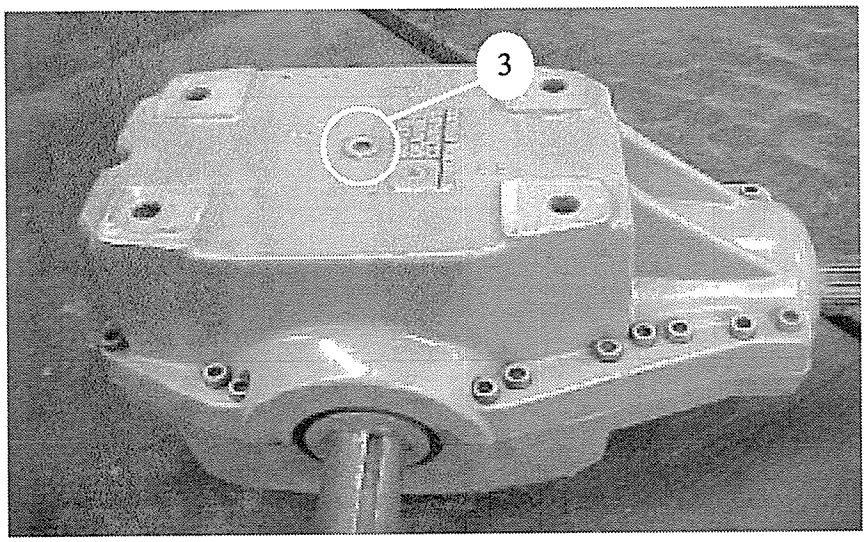

Use only lubricant recommended in the Lubricants Type table in this manual.

1 Check the oil level in the gearbox. Remove the star plug located on the lower left side of the gearbox. If oil is needed use only oil recommended in the Lubricant Types table, fill until oil starts to seep out of the plug hole. Replace the star plug and tighten until snug.

2 Change the gearbox oil at least once every twelve months or 1,000 hours. Remove the star plug located on the bottom of the gearbox, when finished replace plug and tighten until snug. Make sure to change the oil after each season to remove moisture and corrosive contaminants.

3 Your Ag-Bagger® will come with a pressure relief plug on top of the gearbox, make sure the plug and the area surrounding it are kept clear and free of debris. Slight over flow may occur as heat develops during operation.

STOP MACHINE AND TURN OFF ENGINE TO ADJUST, LUBRICATE, OR SERVICE.

Tine Caps Replacement

The pictures to the left show the following:
1. Stripper Bar
2. Tine Cap and tooth installed on rotor.
3. Rotor
4. Tine Caps
5 Rotor Tooth and Tine Cap

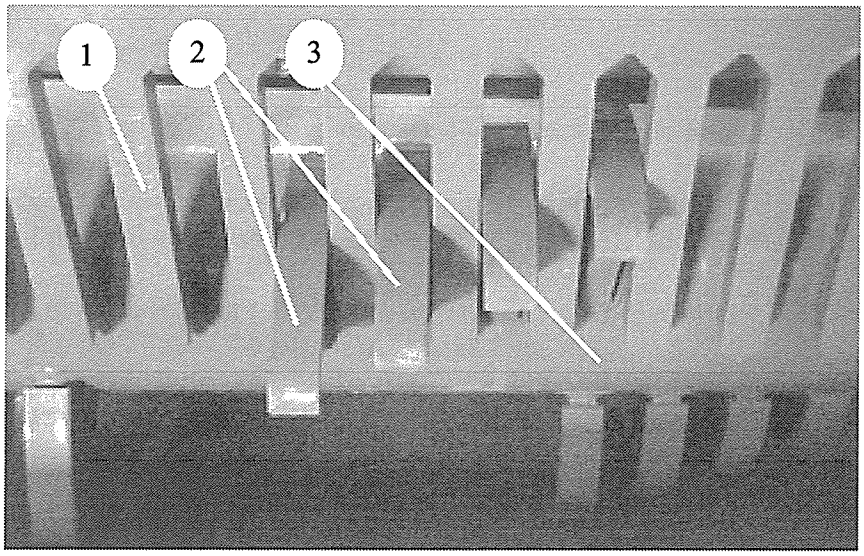

Before starting the replacement make sure the tractor is turned off the keys removed and the PTO disconnected.

Manually turn the rotor until the damaged tine cap is visible. You should be working on this from the tunnel (rear) side of the Ag-Bagger®. Remove the old tine cap. Place the new tine cap on top of the rotor tooth. It should be centered in the space between the two stripper bars. Tack the tine cap in place. When the welding is complete use a hammer to bend the front of the Tine Cap over the Rotor Tooth.

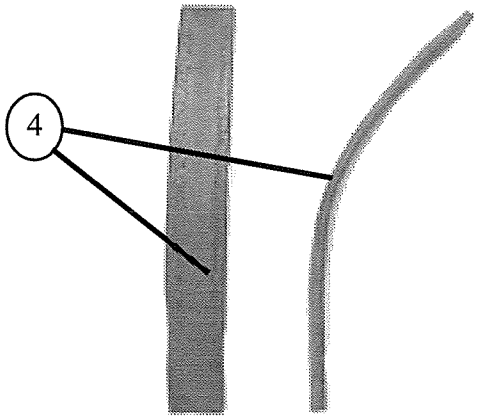

If the space on either side of the tine cap exceeds 1/8-inch you should discuss with your Ag-Bag® Dealer the possibility of replacing the stripper bar plate.

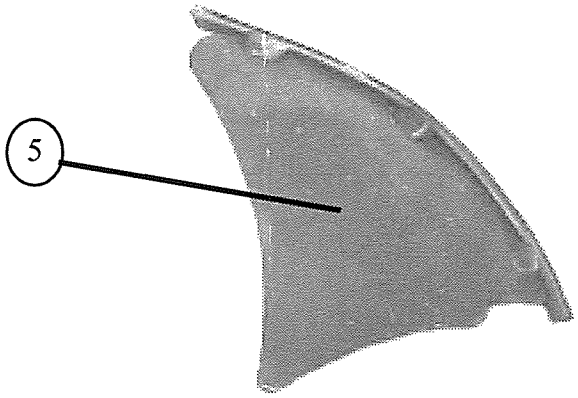

STOP MACHINE AND TURN OFF ENGINE TO ADJUST, LUBRICATE, OR SERVICE.

Prepare the Ag-Bagger® for Storage

☐ Remove any product or acidic juices which will cause corrosion

☐ Clean out the inoculant applicator.

☐ Immediately after washing and prior to storage, grease and lubricate all moving parts on the Ag-Bagger®. Use only oils and lubricants recommended in the Lubricant Types table in this manual.

☐ Remove the rotor chain guard and take the rotor chain off the sprocket. Soak the chain in diesel to clean it. When clean soak in oil to lubricate the rollers. Check the sprockets for signs of wear.

☐ Drain the gearbox and refill with new oil. Use only oil recommended in the Lubricant Types table in this manual.

☐ Check for wear on the rotor tooth tine caps. Replace if worn down and pointy, also replace if there is more than 1/8" spacing between the tine caps and the stripper bars.

☐ Remove all bungee cords and store them out of the weather. Secure the bag pan with a rope or wire.

☐ Place the hand pump lever in a position to keep the shaft from rusting.

STOP MACHINE AND TURN OFF ENGINE TO ADJUST, LUBRICATE, OR SERVICE.

Index

STOP MACHINE AND TURN OFF ENGINE TO ADJUST, LUBRICATE, OR SERVICE.

This manual is organized into groups, it is designed to make the locating of parts easier. The exploded drawings also show assembly paths. All parts listed are available from your authorized Ag-Bag® Dealer.

AG-BAGGER® MODELS
G6060A G6060B G6060C
G6070B G6070C PB6000

THIS PAGE INTENTIONALLY LEFT BLANK

PARTS

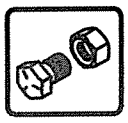

FRAME GROUP

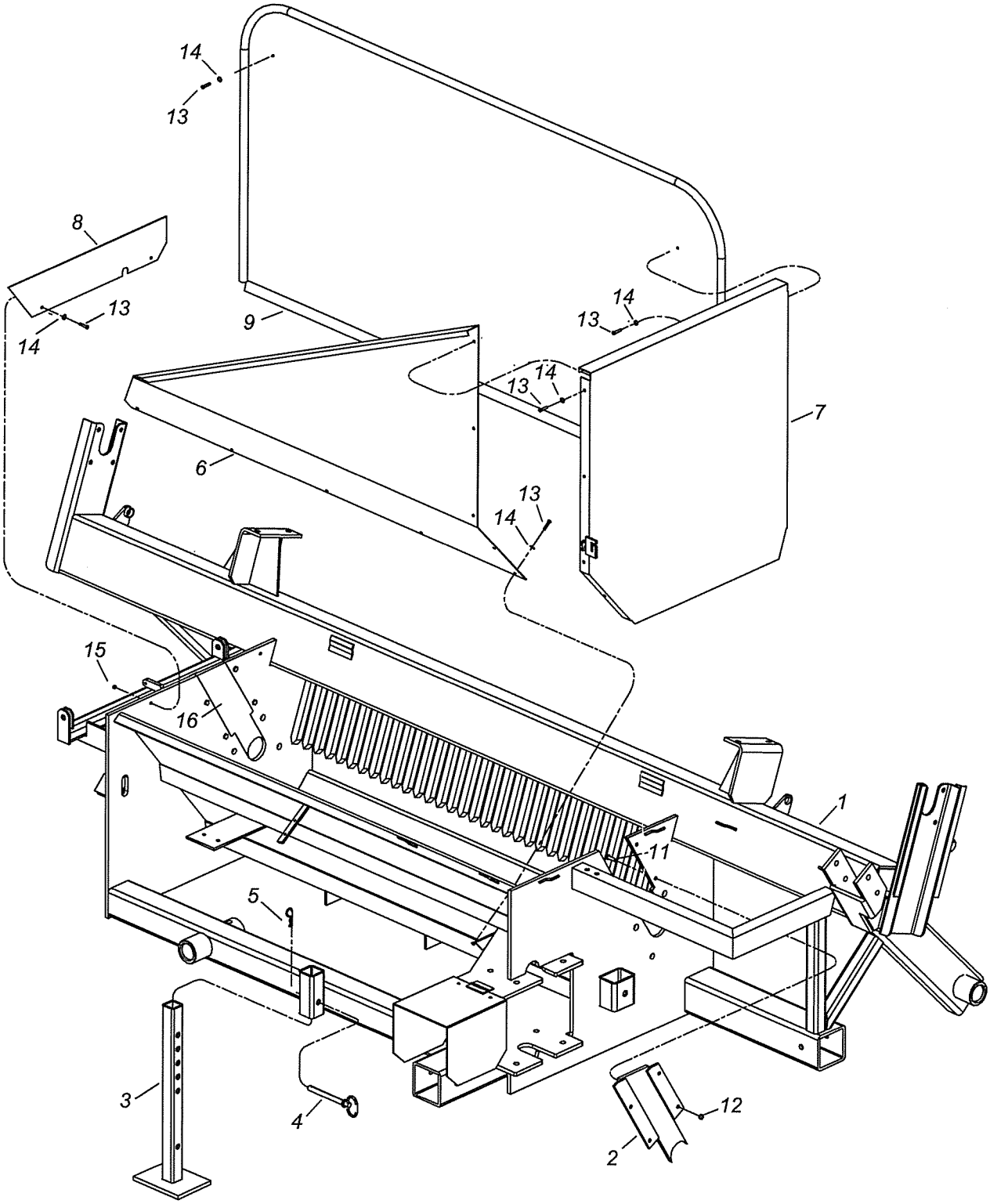

FRAME GROUP

Used On Legend
A - All Models B - G6060
C - G6070 D - PB6000

Item#	Part #	Description	Qty.	Used On - Remarks
1	ref.	Frame	1	
2	6000033	Access Plate, Rotor - Short	1	A
3	6012012	Stand, Jack	1	B,C
4	1550172	Pin, Hitch	1	B, C
5	1550169	Pin, Hair	1	B, C
6	6000127	Panel, Hopper Front	1	C
	6012007	Panel, Hopper Front	1	B, D
7	6012010	Panel, Hopper Right	1	A
8	6012009	Panel, Hopper Left	1	A
9	6012011	Plate, Face	1	B,C
	6006110	Plate, Face	1	D
10	N/A			
11	1550059	Capscrew, Hex Head	8	
12	ref.	Nut, Hex	8	3/8"-16 NC Nyloc
13	ref.	Capscrew, Hex Head	16	1/4"20 NC x 1-1/4 G5
14	ref.	Washer, Flat	16	1/4" SAE
15	N/A			
16	6000036	Access Plate, Rotor-Conveyor Side	1	A

WHEEL GROUP

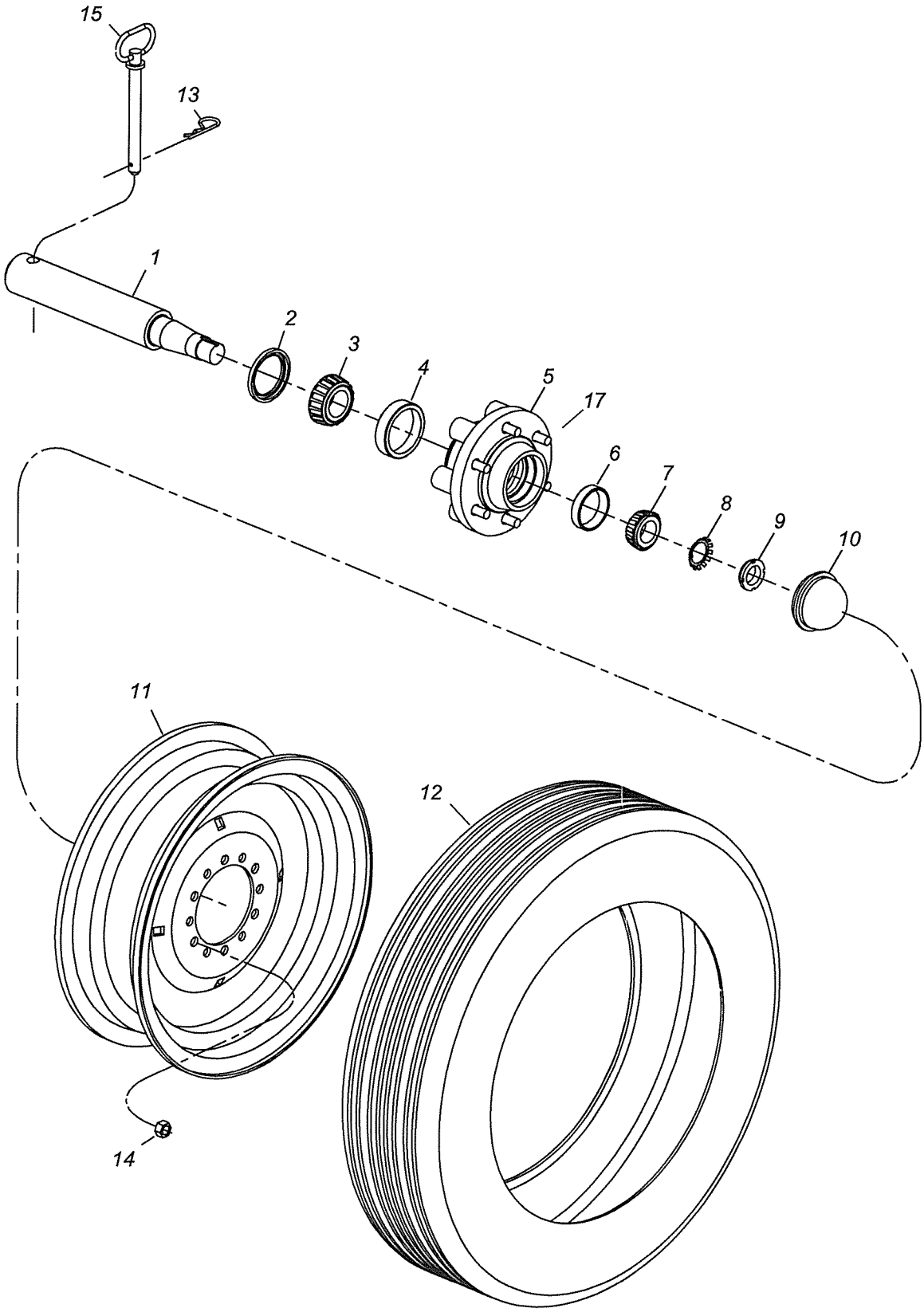

WHEEL GROUP

Used On Legend
A - All Models B - G6060
C - G6070 D - PB6000

Item#	Part#	DESCRIPTION	Qty.	Remarks.
1	1010034	Spindle	2	B, C
	1502063	Spindle	2	D
2	1500377	Seal, Oil	2	A
3	1510090	Bearing, Roller Cone-Inner	2	A
4	1510073	Bearing, Roller Cup-Inner	2	A
5	1500182	Hub, Wheel w/out Washer, Nut, & Spindle	2	A
6	1510093	Bearing, Roller Cup-Outer	2	A
7	1510113	Bearing, Roller Cone-Outer	2	A
8	1550228	Washer, Lock-External Tooth	2	A
9	1550136	Nut, Lock	2	A
10	1500862	Cap, Dust	2	A
11	1500329	Rim	2	A
12	ref.	Tire, 95L 15 Farm Imp	2	D
		Tire, 235/85R 16	2	B
		Tire, 265/75R16	2	C
	1501520	Tire With Rim	2	B
	1501707	Tire With Rim	2	C
	1502073	Tire With Rim	2	D
13	1550169	Pin, Hair	2	A
14	1550309	Nut, Hub Lug	12	A
15	1150171	Pin, Hitch	2	B, C
16	1501374	Hub, Wheel with Spindle Complete	2	B, C
	1502069	Hub, Wheel with Spindle Complete	2	D
17	1550428	Bolt, Stud	12	2-1/8 Drive In

ROTOR GROUP

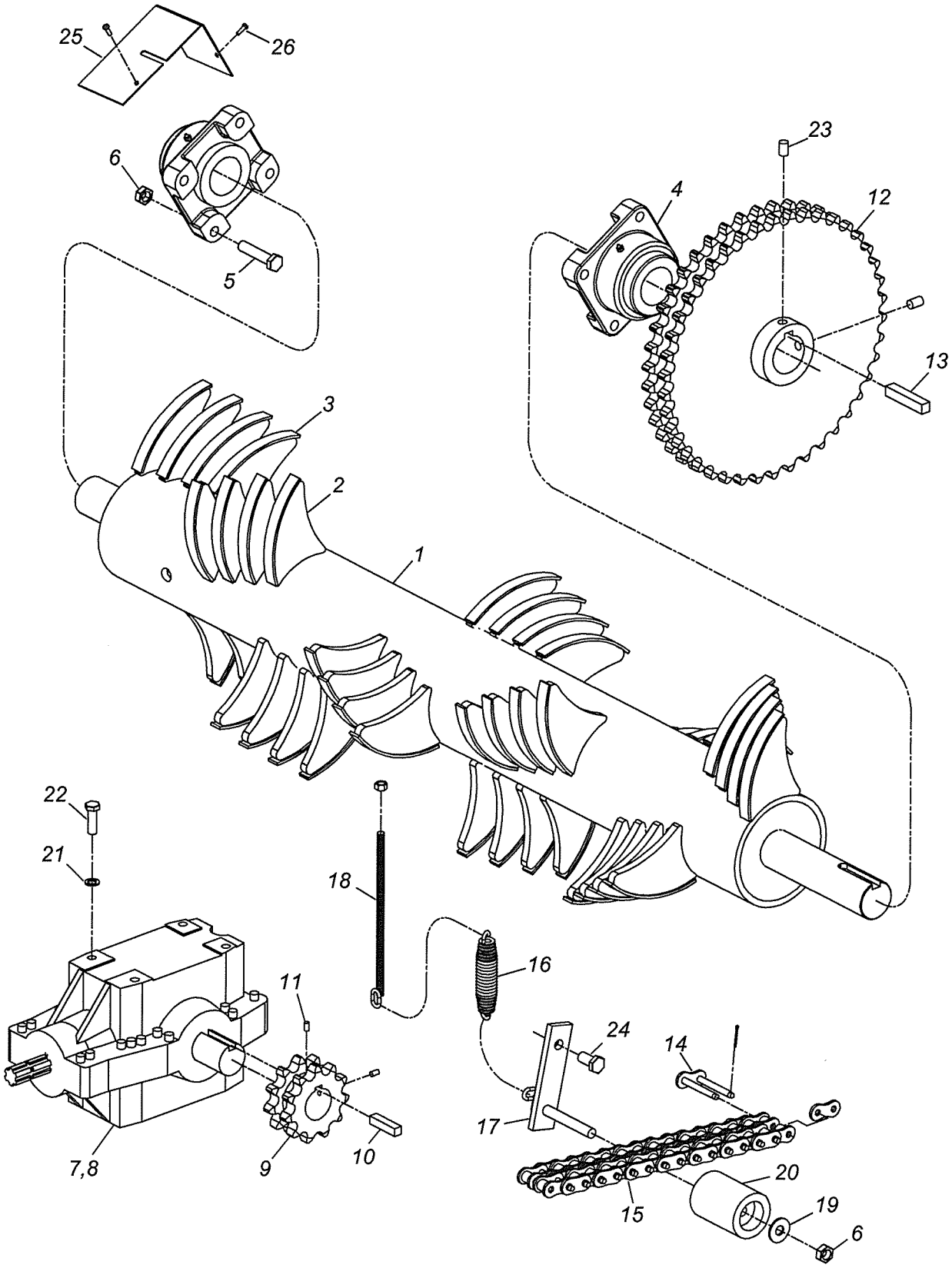

ROTOR GROUP

Used On Legend
A - All Models B - G6060
C - G6070 D - PB6000

Item#	Part#	DESCRIPTION	Qty.	Used On - Remarks
1	6002033	Rotor, W/O Teeth	1	C
	6002019	Rotor, W/O Teeth	1	B, D
2	1020018	Tooth, Rotor with Tine Cap	48	B
		Tooth, Rotor with Tine Cap	56	C
		Tooth, Rotor with Tine Cab	36	D
3	1020001	Cap, Tine	48	B
		Cap, Tine	56	C
		Cap, Tine	36	D
4	1510024	Bearing, Idle Side	1	A
	1510260	Bearing, Drive Side	1	Not shown
5	ref.	Capscrew, Hex Head	8	3/4"-10 NC x 3-1/2" G5
6	ref.	Nut, Hex	8	3/4"-10 NC Nyloc
7	1520051	Gearbox	1	D
8	1520050	Gearbox (Hydraulic Package)	1	B, C
9	1520664	Sprocket	1	A
10	6002002	Key	1	A
11	ref.	Set Screw	2	5/8" x 5/8"
12	1520756	Sprocket	1	C
	1520124	Sprocket	1	B, D
13	1120536	Key	1	C
	4070028	Key	1	B, D
14	1520068	Link, Roller Chain Connecting	1	A
15	1520757	Chain Roller	1	C
	1520005	Chain Roller	1	B, D
16	1500483	Spring	1	A
17	6002006	Support, Chain Tensioner Lever	1	A
18	6002010	Adjuster, Rotor Chain Tensioner	1	A
19	ref.	Washer	1	3/4" Flat
20	6002007	Tensioner, Rotor Chain	1	A
21	ref.	Washer	8	5/8" Split Lock
22	ref.	Capscrew, Hex Head	8	5/8"-11 NC x 2"
23	ref.	Set Screw	2	5/8" x 5/8"
24	ref.	Capscrew, Hex Head	1	3/4"-10 NC x 1-1/2" G5
25	6002028	Cover, Rotor Idle Bearing	1	B, C
26	ref.	Screw, Self Tapping	2	1/4"
ref	1502166	Whip, Grease Whip 20-1/2 (Not Shown)	1	A
ref	1501518	Whip, Grease Whip 28 (Not Shown)	1	A
ref	1501611	Fitting, Hose End Swivel	2	Use with Grease Whips
ref	6002005	Shaft, Stub Drive	1	A
ref	6002008	Shaft, Stub Idle	1	A

CABLE DRUM

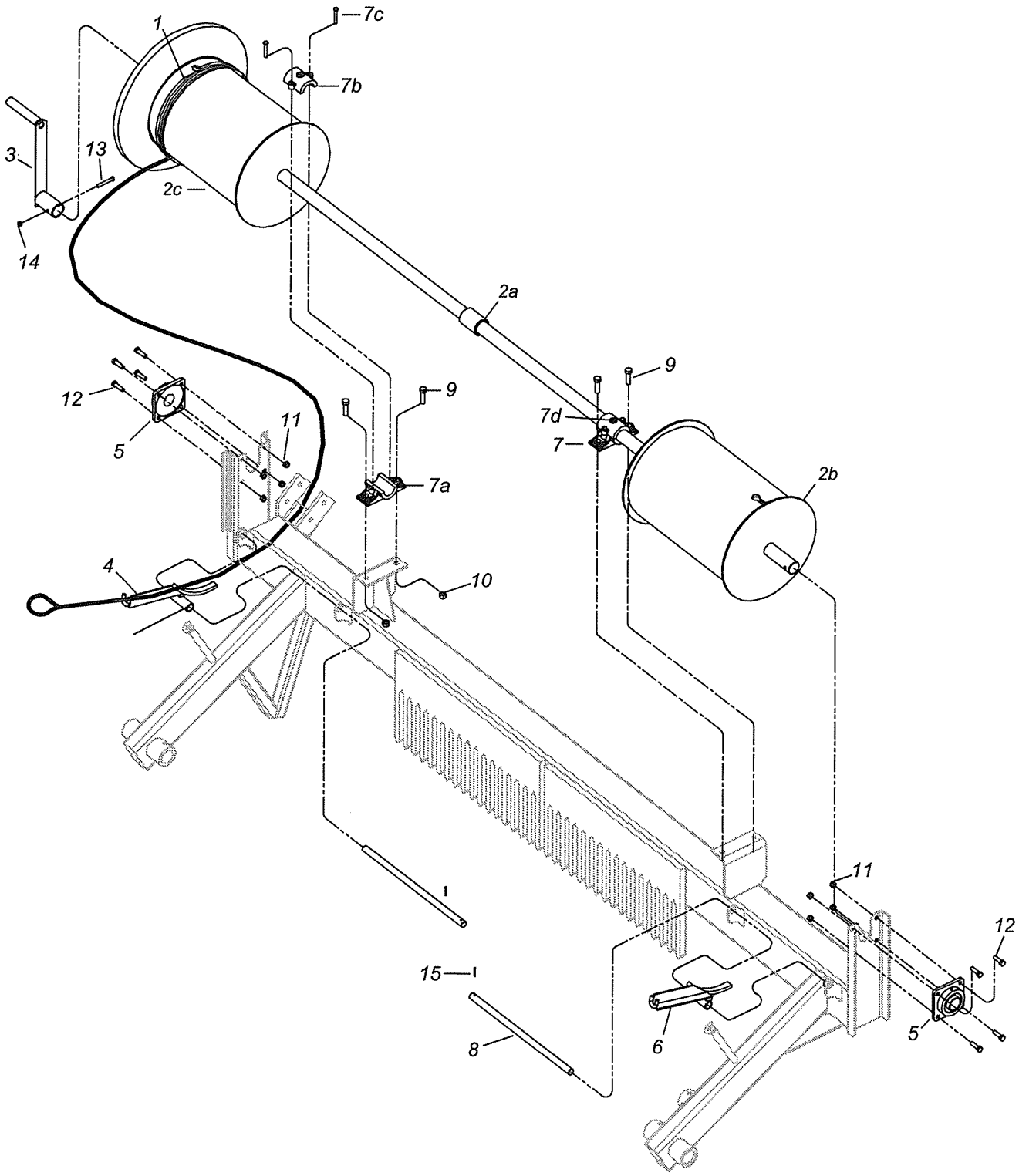

CABLE DRUM

Used On Legend
A - All Models B - G6060
C - G6070 D - PB6000

Item#	Part#	DESCRIPTION	Qty.	Remarks
1	1590065	Wire Rope, Cable Rewind	2	B, D
	1590066	Wire Rope, Cable Rewind	2	C
2a	6003021	Coupler, Cable Drum Weld	1	A
2b	6003024	Cable Drum, Non Brake Side 8-9'	1	B, D
	6003028	Cable 10'	2	C
2c	6003025	Cable Drum, Brake Side 8-9'	1	B, D
3	1030017	Crank, Cable Rewind	1	A
4	6003014	Shoe, Cable Rewind-Right	1	A
5	1510044	Bearing	2	A
6	6003013	Shoe, Cable Rewind-Left	1	A
7	1510047	Bearing	2	A
7a	ref.	Bearing, Split Base	Ref.	
7b	ref.	Bearing, Split Top	Ref.	
7c	ref.	Capscrew, Bearing Connector	Ref.	
7d	1541637	Fitting, Grease	2	A
8	1030069	Shaft, Cable Rewind	2	B,D
	6003018	Rod, Cable Rewind	2	C
9	ref.	Capscrew, Hex Head	4	5/8-11 NC x 2-1/4 G5
10	ref.	Nut, Hex	4	5/8-11 NC Nyloc
11	ref.	Nut, Hex	8	1/2-13 NC Lock
12	ref.	Capscrew, Hex Head	8	1/2-13 NC x 1-1/4 G5
13	ref.	Capscrew, Hex Head	1	3/8-16 NC x 2-3/4
14	ref.	Nut, Hex	1	3/8-16 NC Nyloc
15	ref.	Pin, Hair	2	1/8

TUNNEL with BAG BOOM OPTION

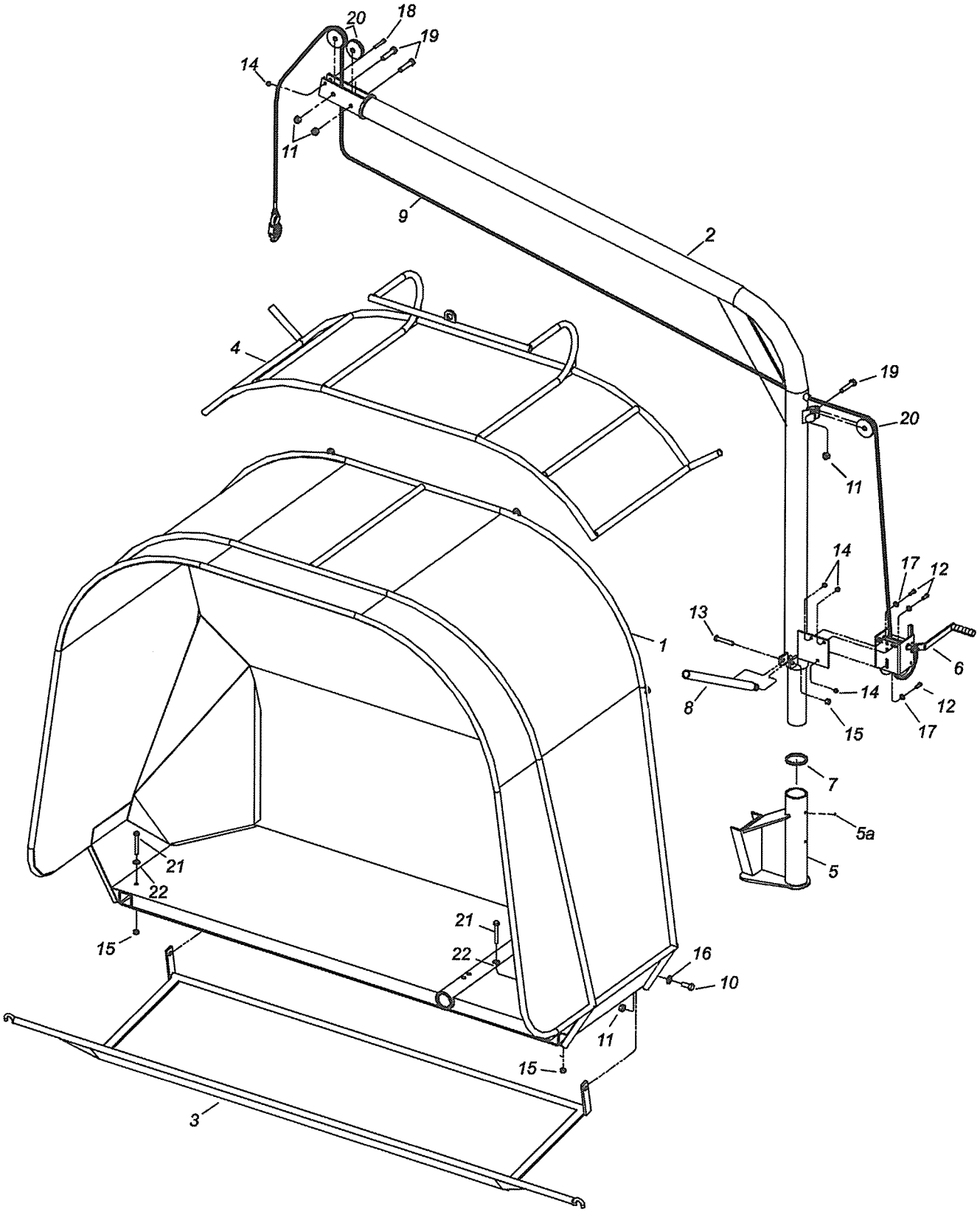

TUNNEL with BAG BOOM OPTION

Used On Legend
A - All Models B - G6060
C - G6070 D - PB6000

Item#	Part#	DESCRIPTION	Qty.	Remarks
1	6006111	Tunnel, 8'	1	D
	6006109	Tunnel, 9'	1	D
2	6006001	Bag Boom Frame 8' and 9'	1	B
	6006000	Bag Boom Frame 10'	1	C
3	6006005	Pan, Bag 8' and 9'	1	B, D
	6006037	Pan, Bag 10'	1	C
4	6006012	Cradle, Bag Boom 8' and 9'	1	B, D
	6006039	Cradle, Bag Boom 10'	1	C
	6006088	Cradle, Bag Boom 9'	1	C
5	6006006	Socket, Bag Boom	1	A
5a	1541638	Fitting, Gease	2	A
6	1500602	Winch, Manual	1	A
7	1060039	Spacer, Bag Boom Bronze	1	A
8	1060085	Bar, Bag Boom Turn	1	A
9	1501691	Cable, With Hook	1	A
10	ref.	Capscrew, Hex Head	2	5/8-11 NC x 1-1/2 G5
11	ref.	Nut, Hex	4	5/8-11 NC Nyloc
12	ref.	Capscrew, Hex Head	3	3/8-16 NC x 1 G5
13	ref.	Capscrew, Hex Head	1	1/2-13 NC x 3 G5
14	ref.	Nut, Hex	4	3/8-16 NC Nyloc
15	ref.	Nut, Hex	3	1/2-13 NC Nyloc
16	ref.	Washer, Flat	2	5/8
17	ref.	Washer, Flat	3	3/8
18	ref.	Capscrew, Hex Head	1	3/8-16 NC x 2-1/2 G5
19	ref.	Capscrew, Hex Head	2	5/8-11 NC x 3 G5
20	1060036	Pulley, Bag Boom	3	A
21	ref.	Capscrew, Hex Head	2	1/2-13 NC x 3-1/2 G5
22	ref.	Washer, Flat	2	1/2

TUNNEL INTERCHANGEABLE HOOD with BAG BOOM OPTION

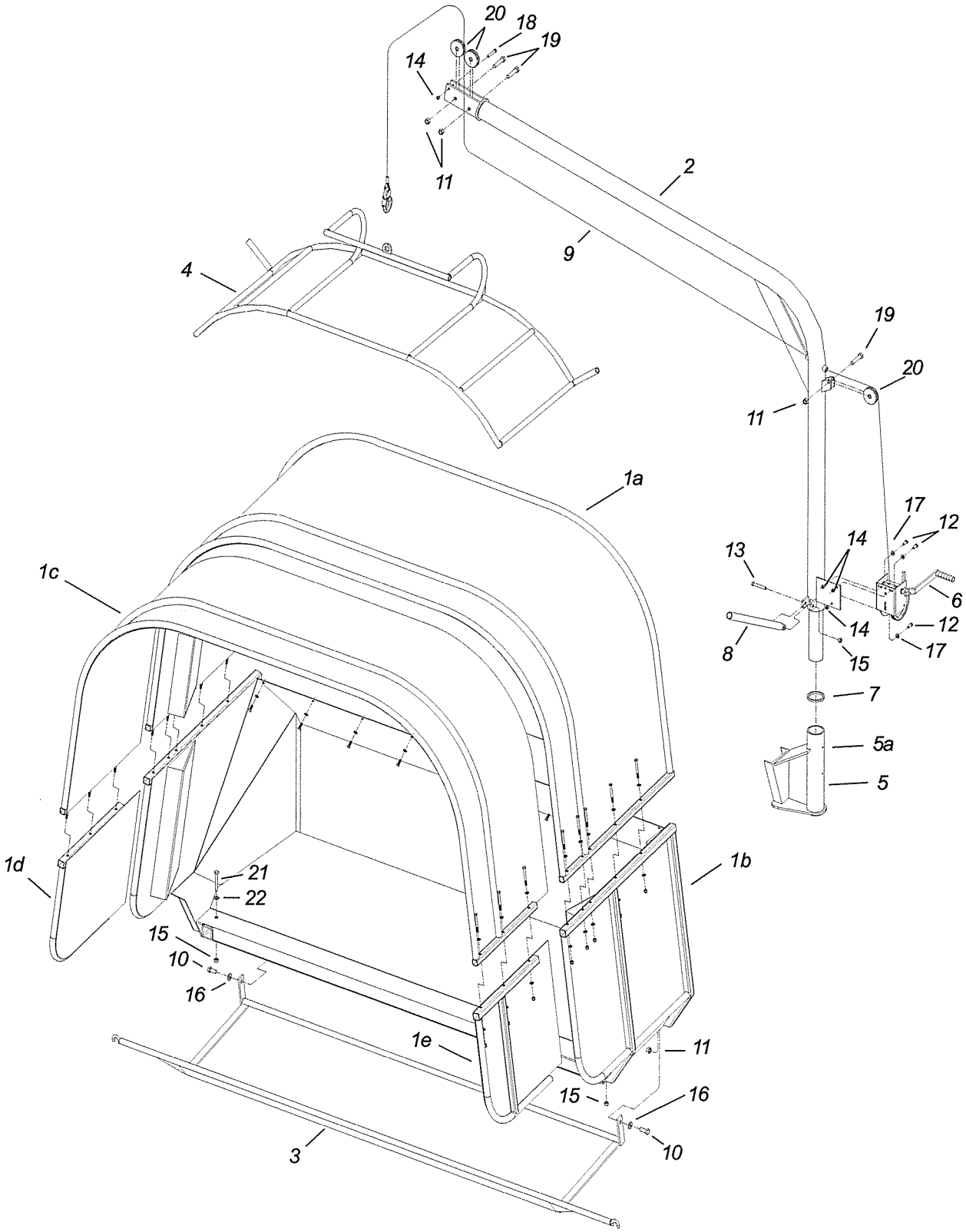

TUNNEL INTERCHANGEABLE HOOD with BAG BOOM OPTION

Used On Legend
A - All Models B - G6060
C - G6070 D - PB6000

Item#	Part#	DESCRIPTION	Qty.	Remarks
1a	6006071	Tunnel Hood 8'	1	B
	6006072	Tunnel Hood 9'	1	B
	6006074	Tunnel Hood 9'	1	C
	6006075	Tunnel Hood 10'	1	C
1b	6006070	Tunnel Base 6060	1	B
	6006073	Tunnel Base 6070	1	C
1c	6006076	Tunnel Extension 8' x 18"	1	B
	6006077	Tunnel Extension 8' x 29"	1	B
	6006078	Tunnel Extension 9' x 18"	1	B
	6006079	Tunnel Extension 9' x 29"	1	B
	6006080	Tunnel Extension 10' x 18"	1	C
	6006081	Tunnel Extension 10' x 29"	1	C
	6006084	Tunnel Extension 9' x 18"	1	C
	6006085	Tunnel Extension 9' x 29"	1	C
1d	6006113	Tunnel Extension Base 29"	1	B, C
	6006115	Tunnel Extension Base 18"	1	B, C
1e	6006114	Tunnel Extension Base 29"	1	B, C
	6006116	Tunnel Extension Base 18"	1	B, C
ref	6006087	Tunnel Extension Base 29"	set	B, C
ref	6006087	Tunnel Extension Base 18"	set	B,C
2	6006001	Bag Boom Frame 8' and 9'	1	B, D
	6006000	Bag Boom Frame 10'	1	C
3	6006005	Pan, Bag 8' and 9'	1	B, D
	6006037	Pan, Bag 10'	1	C
4	6006012	Cradle, Bag Boom 8' and 9'	1	B, D
	6006089	Cradle, Bag Boom 10'	1	C
	6006088	Cradle, Bag Boom 9'	1	C
5	6006006	Socket, Bag Boom	1	A
5a	1541638	Fitting, Gease	2	A
6	1500602	Winch, Manual	1	A
7	1060039	Spacer, Bag Boom Bronze	1	A
8	1060085	Bar, Bag Boom Turn	1	A
9	1501691	Cable, With Hook	1	A
10	ref.	Capscrew, Hex Head	2	5/8-11 NC x 1-1/2 G5
11	ref.	Nut, Hex	4	5/8-11 NC Nyloc
12	ref.	Capscrew, Hex Head	3	3/8-16 NC x 1 G5
13	ref.	Capscrew, Hex Head	1	1/2-13 NC x 3 G5
14	ref.	Nut, Hex	4	3/8-16 NC Nyloc
15	ref.	Nut, Hex	3	1/2-13 NC Nyloc
16	ref.	Washer, Flat	2	5/8
17	ref.	Washer, Flat	3	3/8
18	ref.	Capscrew, Hex Head	1	3/8-16 NC x 2-1/2 G5
19	ref.	Capscrew, Hex Head	2	5/8-11 NC x 3 G5
20	1060036	Pulley, Bag Boom	3	A
21	ref.	Capscrew, Hex Head	2	1/2-13 NC x 3-1/2 G5
22	ref.	Washer, Flat	2	1/2

STANDARD CONVEYOR

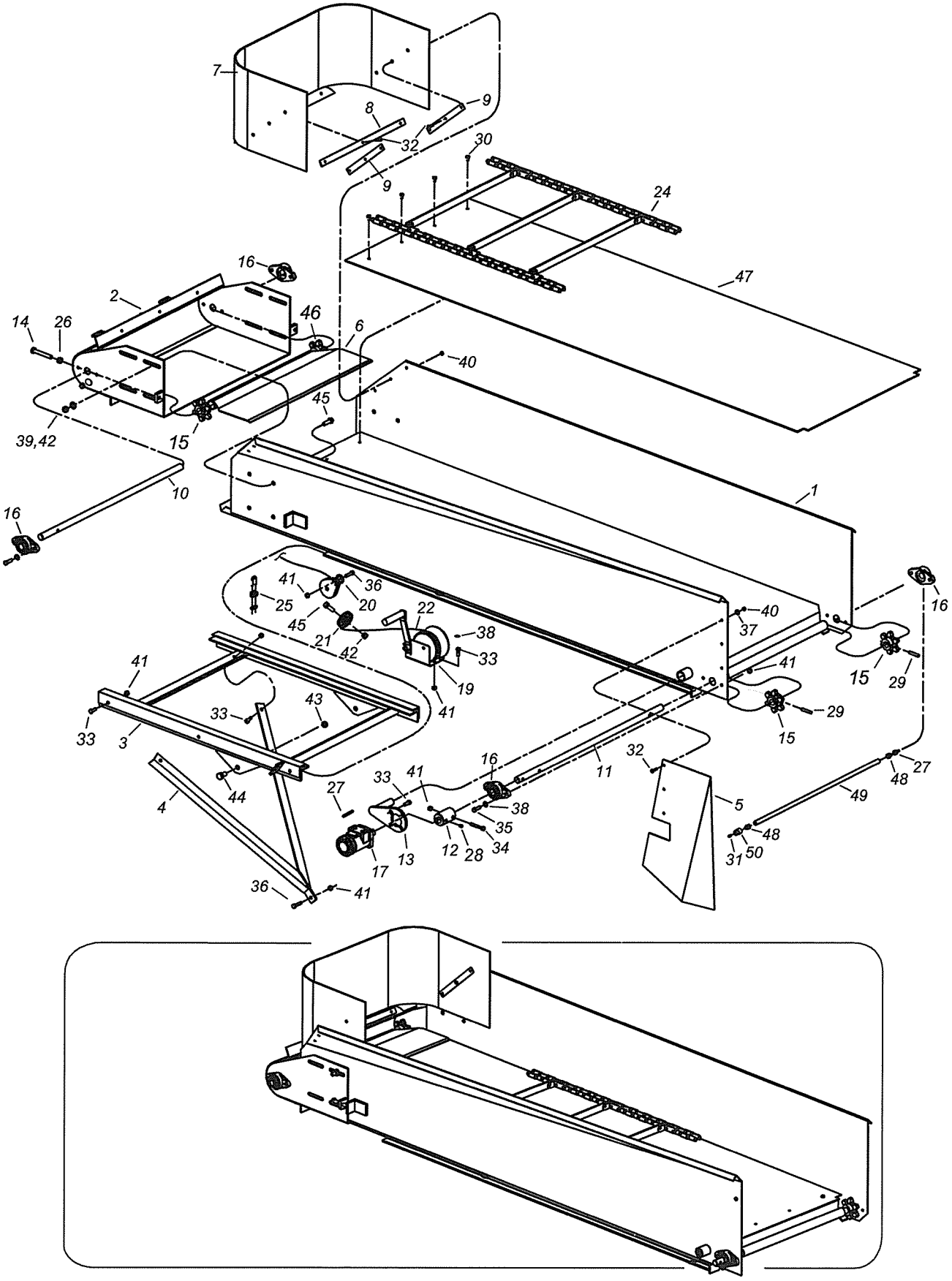

STANDARD CONVEYOR

Used On Legend
A - All Models B - G6060
C - G6070 D - PB6000

Item#	Part#	DESCRIPTION	Qty.	Remarks
1	6008001	Conveyor, Frame	1	B, D
2	6008024	Conveyor End, Adjusting	1	B, D
Ref	6008075	Door Assembly, Conveyor, W/Hooks	1	Not Shown
3	6008007	Frame, Conveyor Track H	1	B, D
4	6008006	Stabilizer, Conveyor Angle Adjustment	1	B, D
5	6008013	Plate, Conveyor End Deflector	1	B, D
6	6008027	Guard, Conveyor Tail Shaft	1	B, D
7	6008052	Skirt, Conveyor	1	B, D
8	6008020	Strip, Conveyor Skirting Center	1	B, D
9	6008021	Bracket, Skirting-Small	2	B, D
10	6008093	Shaft, Conveyor Idle	1	B, D
11	6008092	Shaft, Conveyor Drive	1	B, D
12	6008004	Coupler, Conveyor Motor	1	B, D
13	6008011	Mount, Hydraulic Motor	1	B, D
14	ref.	Capscrew, Hex Head	2	1/2-13 NC x 6
15	1520773	Sprocket, Drive	3	B, D
16	6008088	Bearing, 2 Bolt Flange	4	B, D
	1510020	Bearing, 1" 2 Bolt Flange	ref	
17	1540898	Motor, Hydraulic	1	B, D
17a	1541780	Motor, Hydraulic	1	B, C
19	1501521	Winch, Manual	1	B, D
20	1501314	Pulley, Swivel	1	B, D
21	1501279	Pulley	1	B, D
22	1590040	Cable, Aircraft	1	B, D
23	6008018	Slat, Conveyor Chain (Not Shown)	17	B, D
24	1520318	Chain, Conveyor Complete	1	B, D
25	1590024	Clamp, Cable	2	B, D
26	ref.	Nut, Hex	2	1/2-13 Jam Nyloc
27	N/A			
28	1550192	Screw, Set	1	B, D
29	1550181	Pin, Roll	2	B, D
30	ref.	Capscrew, Hex Head	4	5/16-18 NC x 3/4 G5
31	1541638	Fitting, Grease	2	B, D
32	ref.	Capscrew, Hex Head	12	1/4-20 NC x 1 G5
33	ref.	Capscrew, Hex Head	8	3/8-16 NC x 1 G5
34	ref.	Capscrew, Hex Head	1	3/8-16 NC x 2-1/2 G5
35	ref.	Capscrew, Hex Head	8	3/8-16 NC x 1-1/4 G5
36	ref.	Capscrew, Hex Head	2	3/8-16 NC X 1-1/2 G5

(Con't next page)

CONVEYOR GROUP

Used On Legend
A - All Models B - G6060
C - G6070 D - PB6000

Item#	Part#	DESCRIPTION	Qty.	Remarks
37	ref.	Washer, Flat	12	1/4
38	ref.	Washer, Flat	8	3/8
39	ref.	Washer, Flat	8	1/2
40	ref.	Nut, Hex	12	1/4-20 NC Lock
41	ref.	Nut, Hex	19	3/8-16 NC Lock
42	ref.	Nut, Hex	9	1/2-13 NC Lock
43	ref.	Nut, Hex	2	5/8-11 NC Nyloc
44	ref.	Capscrew, Hex Head	2	5/8-11 NC x 1 G5
45	ref.	Capscrew, Hex Head	9	1/2-13 NC x 1-1/2 G5
46	1120218	Sprocket, Idle	1	B, D
47	1501324	Polyethelene, High Density	1	B, D
48	N/A			
49	1501519	Grease Whip	1	B, D
	1501517	Grease Whip	1	C
50	N/A			
ref	6008072	Guide, Conveyor Chain - Left	1	B, D - Not Shown
ref	6008072	Guide, Conveyor Chain - right	1	B, D - Not Shown
ref	6008003	Conveyor Complete	1	B, D
ref	1501511	Fitting, Hose End Swivel	Used with Grease Whips	

THIS PAGE INTENTIONALLY LEFT BLANK

SPLIT CONVEYOR

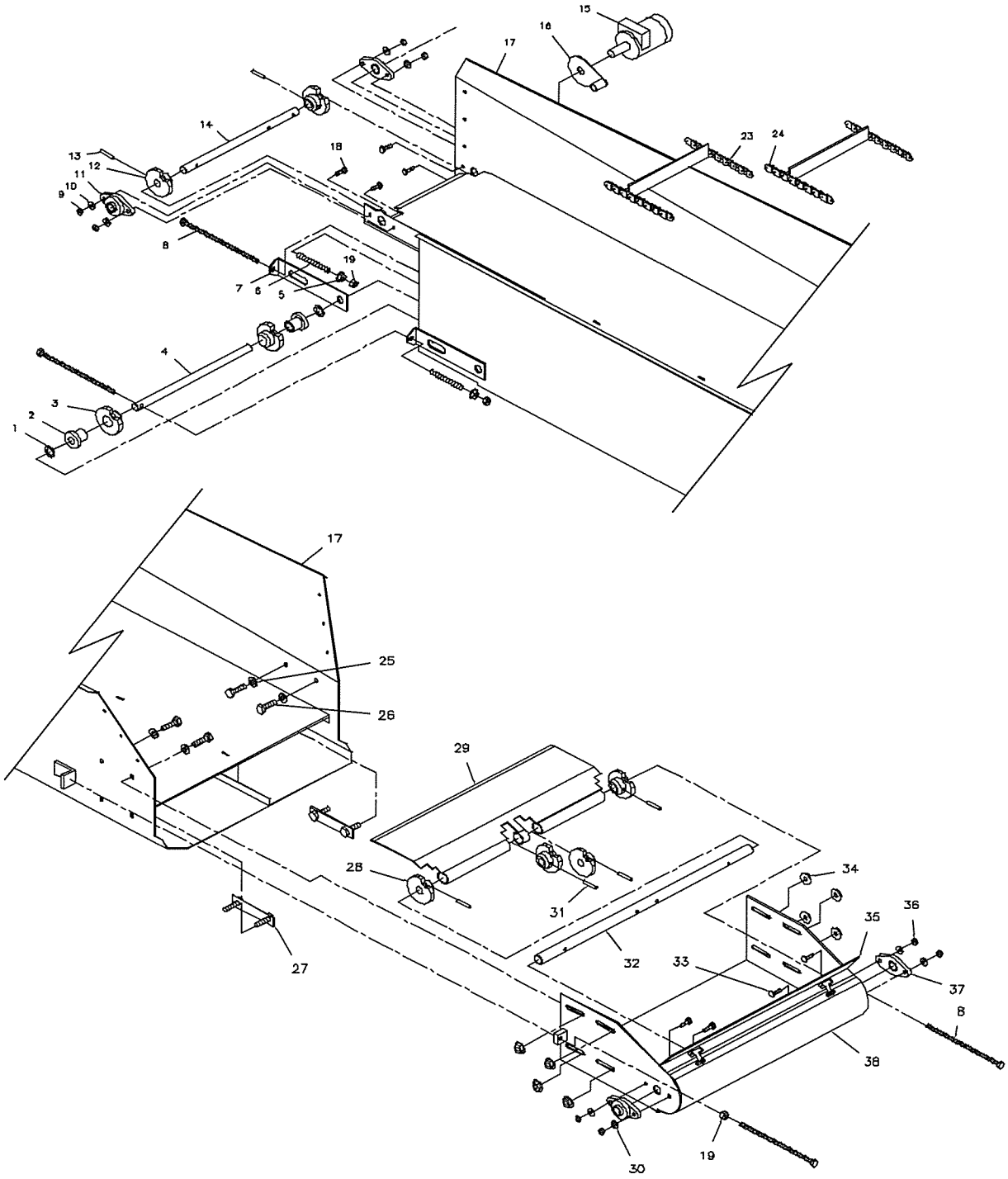

SPLIT CONVEYOR

Used On Legend
A - All Models B - G6060
C - G6070 D - PB6000

Item#	Part#	DESCRIPTION	Qty.	Remarks
1	ref.	Washer, Flat	2	1
2	ref.	Bushing	2	Included with #3
3	6008083	Sprocket	2	B, C
4	6008085	Shaft, Idle - Top	1	B, C
5	ref.	Nut, Flange	2	1/2-13 NC
6	6008086	Spring, Compression	2	B, C
7	6008080	Bracket		B, C
8	6008087	Bolt, Adjuster	4	B, C
9	ref.	Nut, Hex	4	7/16-14NC
10	N/A			
11	6008088	Bearing, 2 bolt flange	4	B, C
12	1520773	Sprocket, Drive	2	B, C
13	1550181	Pin	2	B, C
14	6008090	Shaft, drive - top	1	B, C
15	1541780	Motor, Hydraulic	1	B, C
16	6008011	Mount, Hydraulic Motor	1	B, C
17	6008084	Conveyor Complete - Split	ref	
17a	6008076	Conveyor Body Weldment	ref	
18	ref.	Capscrew, Hex	4	7/16-14nc X 1-1/4
19	ref.	Nut, Hex	4	1/2-13 NC
22	N/A			
23	6008078	Chain, split conveyor - short	1	B, C
24	6008077	Chain, split conveyor - long	1	B, C
25	ref.	Washer, Flat	4	1/2
26	ref.	Capscrew, Hex	4	1/2-13 NC x 1-1/2
27	6008091	Bracket, Adjusting & Mount	2	B, C
28	6008097	Sprocket, Idle	4	B, C
29	6008098	Guard, Conveyor Chain - split	1	B, C
30	N/A			
31	ref.	Pin	4	3/8 X 2
32	6008094	Shaft, Conveyor Intermediate	1	B, C
33	ref.	Capscrew, Hex	4	7/16-14NC x 1-1/4
34	ref.	Nut, Flange	8	1/2-13NC
35	6008095	Conveyor End, Adjusting	1	B, C
36	ref.	Nut, Hex	4	7/16-14NC
37	1510261	Bearing, 1-3/8 Flange	2	B,C
38	6008098	Door Assembly, Conveyor w/hooks	1	B, C
17	6008004	Coupler, Conveyor Motor	1	B, C - Req for Complete
17	6008013	Deflector, Conveyor	1	B, C - Req for Complete
17	6008052	Skirt, Conveyor 20 x 60	1	B, C - Req for Complete
ref	6008020	Strip, Conveyor Skirting Center	1	B, C - Not Shown
ref	6008021	Strip, Conveyor Skirting Side	2	B, C - Not Shown
ref	6008072	Guide, Conveyor Chain - Left	1	B, C - Not Shown
ref	6008073	Guide, Conveyor Chain - Right	1	B, C - Not Shown

BACKSTOP

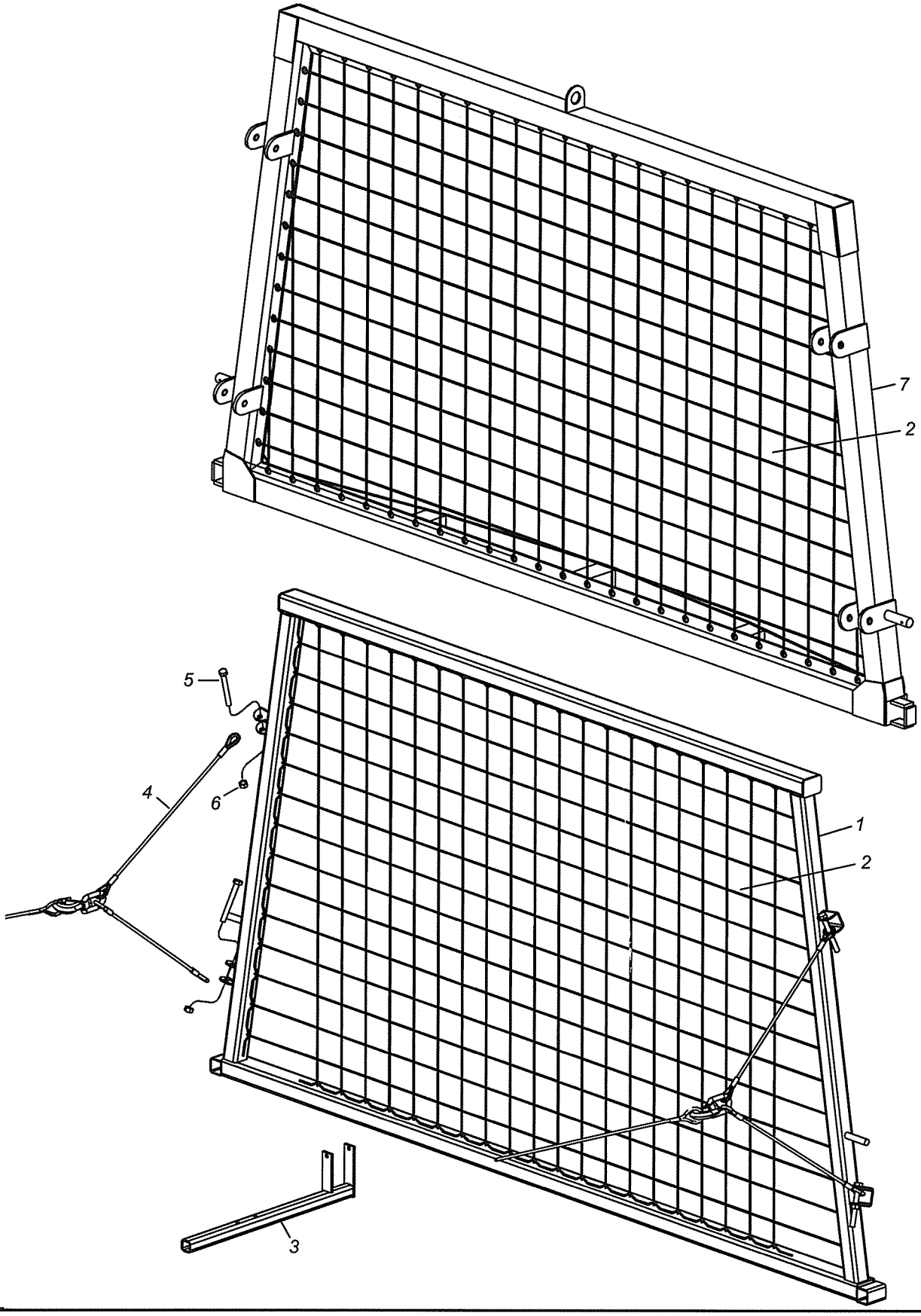

BACKSTOP

Used On Legend
A - All Models B - G6060
C - G6070 D - PB6000

Item#	Part#	DESCRIPTION	Qty.	Remarks
1	1090014	Backstop, Frame, Steel 8 & 9 Foot	1	B, D
	1090034	Backstop, Frame, Alum 8 & 9 Foot	1	B
	1090008	Backstop, Frame, Steel 10 Foot	1	C
	1090031	Backstop, Frame, Alum 10 Foot	1	C
2	1560005	Rope, Backstop 300'	1	B, D
	1560006	Rope, Backstop 400'	1	C
3	1090026	Support, Backstop Transport Locking	2	B, D
	6006063	Support, Backstop Transport Locking	2	B, C
	6006112	Support, Backstop Transport Alumin	2	B
	1060160	Support, Backstop Transport Alumin	2	C
4	1500412	Sling, Backstop Cable	2	A
5	ref.	Capscrew, Hex Head	4	3/4-10 NC x 6-1/2 G5
6	ref.	Nut, Hex	4	3/4-10 NC Nyloc

HYDRAULICS -G6060A - PB6000

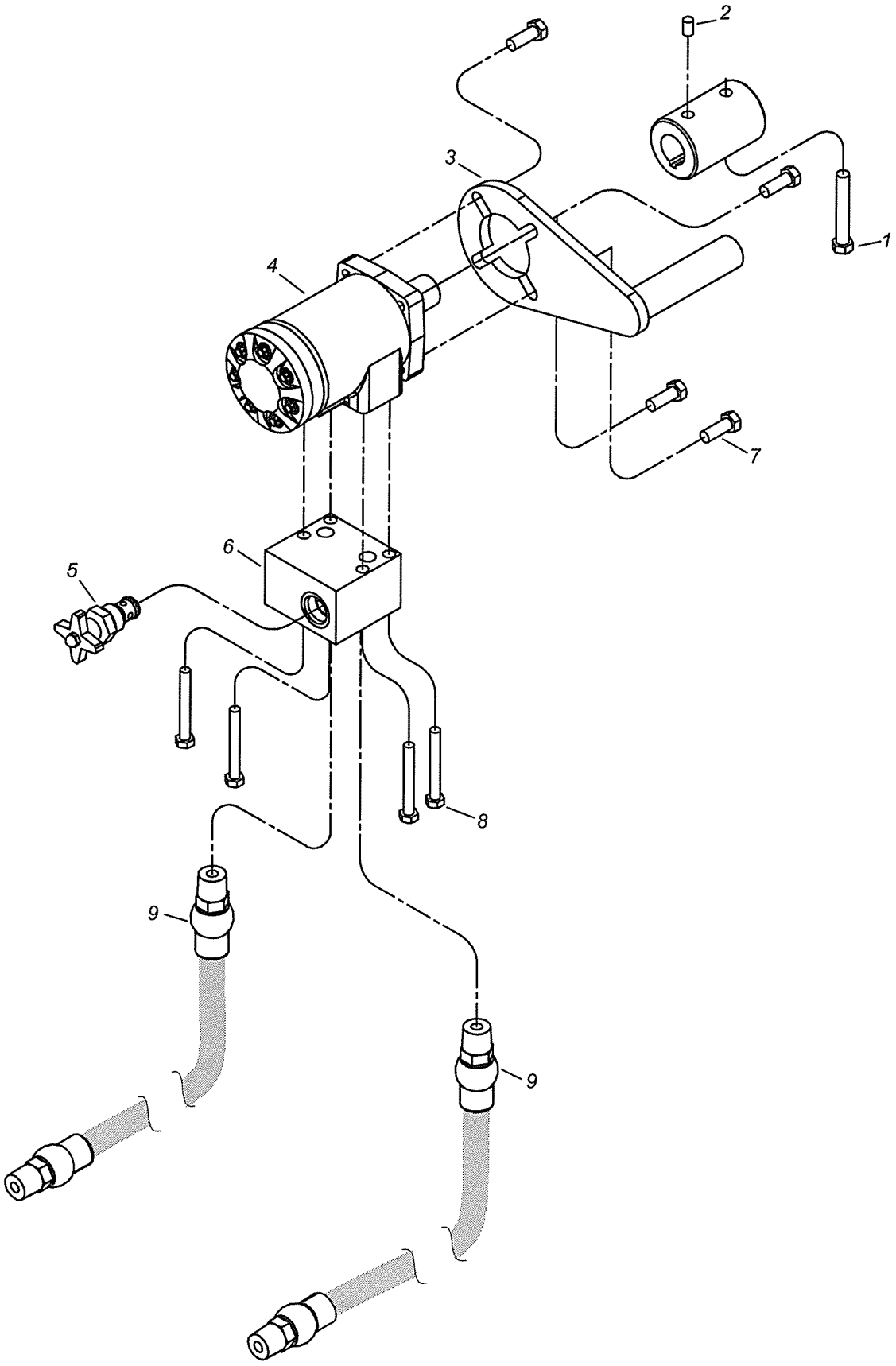

HYDRAULICS - G6060A - PB6000

Item#	Part#	DESCRIPTION	Qty.	Remarks
1	ref.	Cap Screw, Hex Head	1	3/8-16 UNC X 2-1/2 G5
2	ref.	Screw, Set	1	3/8 UNC x 1/2
3	6008011	Mount, Hydraulic Motor (Conveyor)	1	
4	1540898	Motor, Hydraulic	1	
5	1540025	Valve, Pressure Control Relief	1	
6	1541237	Valve, Conveyor Motor	1	
7	ref.	Cap Screw, Hex Head	4	3/8-16 NC x 1 G5
8	ref.	Cap Screw, Hex Head	4	5/16-18 x 2-1/2 G5
9	6010002	Kit, Hydraulic Hose	1	
ref	1540116	Quick Coupler Fitting	2	

HYDRAULIC PACKAGE OPTION - G6060B & G6070B

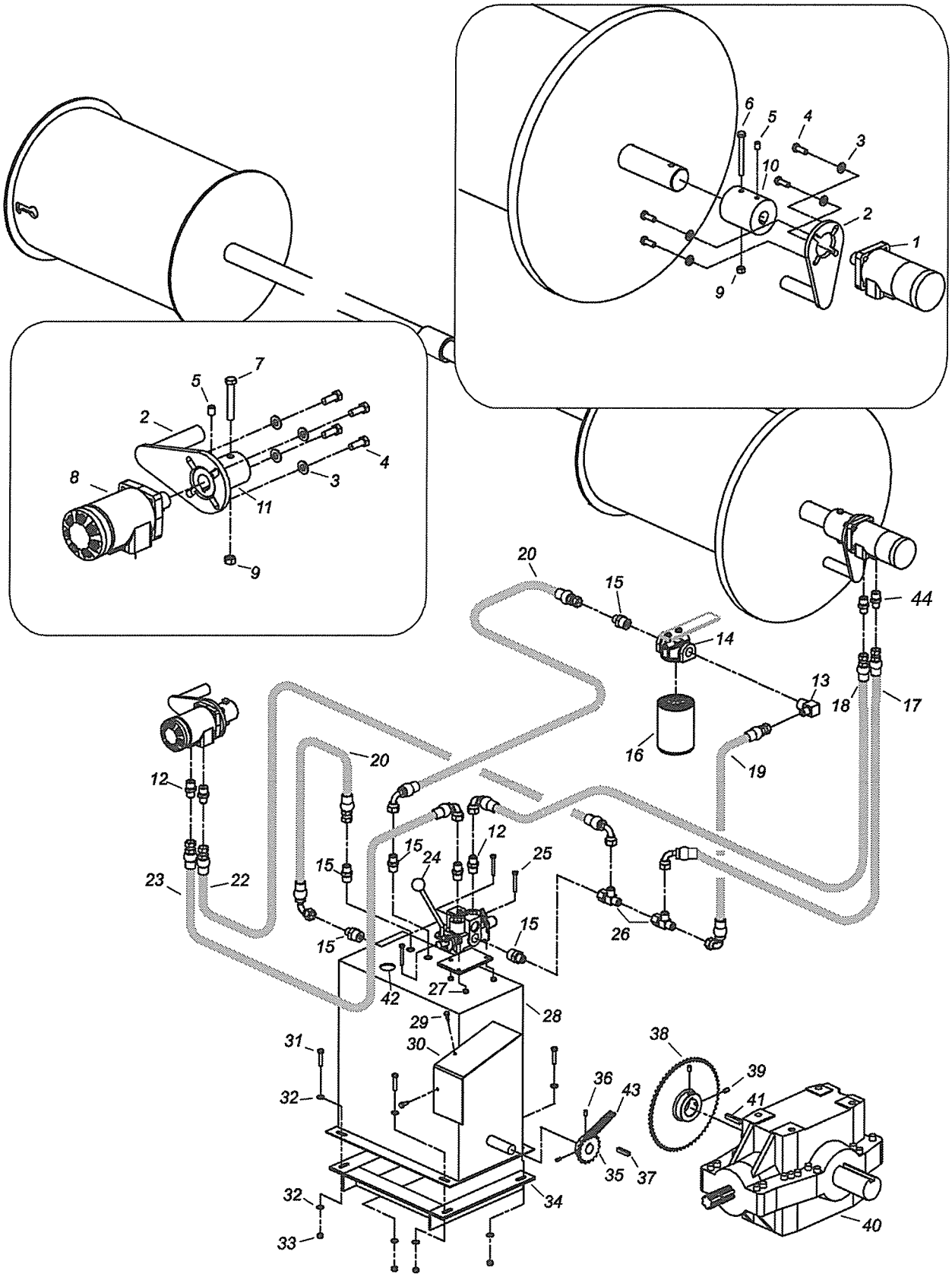

HYDRAULIC PACKAGE OPTION - G6060B & G6070B

Item#	Part#	DESCRIPTION	Qty.	Remarks
1	N/A			
2	6008011	Mount, Hydraulic Motor	1	
3	ref.	Washer, Flat	4	3/8 NOM
4	ref.	Cap Screw, Hex Head	4	3/8-16 UNC x 1 G5
5	ref.	Screw, Set	1	3/8-16 UNC x 1/2
6	N/A			
7	ref.	Cap Screw, Hex Head	1	3/8-16 UNC x 2-1/2 G5
8	1541780	Motor, Hydraulic	1	
9	ref.	Nut, Hex	1	3/8-16 UNC Nyloc
10	N/A			
11	6008004	Coupling, Conveyor Motor	1	
12	1541649	Fitting, Hydraulic	4	
13	1541758	Fitting, Hydraulic	1	
14	1541757	Base, Filter	1	
15	1541759	Fitting, Hydraulic	1	
16	1540167	Filter, Hydraulic Oil	1	
17	N/A			
18	N/A			
19	1541609	Hose Assembly 15"	1	
20	1541503	Hose Assembly 15" (2 hoses)	1	
22	1541609	Hose Assembly 70"	1	
23	1541609	Hose Assembly 66"	1	
24	1541648	Valve, Brand	1	
25	ref.	Cap Screw, Hex Head	3	1/4-20 UNC x 2 G5
26	N/A			
27	ref.	Nut, Hex	3	1/4-20 UNC Lock
28	1541032	Pump, Hydraulic With Tank	1	
29	ref.	Screw	2	1/4 Self Tap x 1
30	6012003	Guard, Hydraulic Pump Chain	1	
31	ref.	Cap Screw, Hex Head	4	5/16-18 UNC x 1-1/2 G5
32	ref.	Washer, Flat	8	5/16 NOM
33	ref.	Nut, Hex	4	5/16-18 UNC Lock
34	6012001	Mount, Hydraulic Pump Williams	1	
35	1520759	Sprocket	1	
36	1550262	Set Screw, Sprocket	2	
37	ref.	Key	1	1/4 x 1/4 x 2
38	1520760	Sprocket	1	
39	ref.	Set Screw, Sprocket	2	3/8 x 1/2 SS
40	1520050	Gearbox	1	
41	ref.	Key	1	3/8 x 3/8 x 2
42	1500686	Cap, Breather Williams Pump (Not Shown)	1	
43	1520761	Chain, Roller	1	
44	N/A			

HYDRAULIC PACKAGE OPTION - G6060C

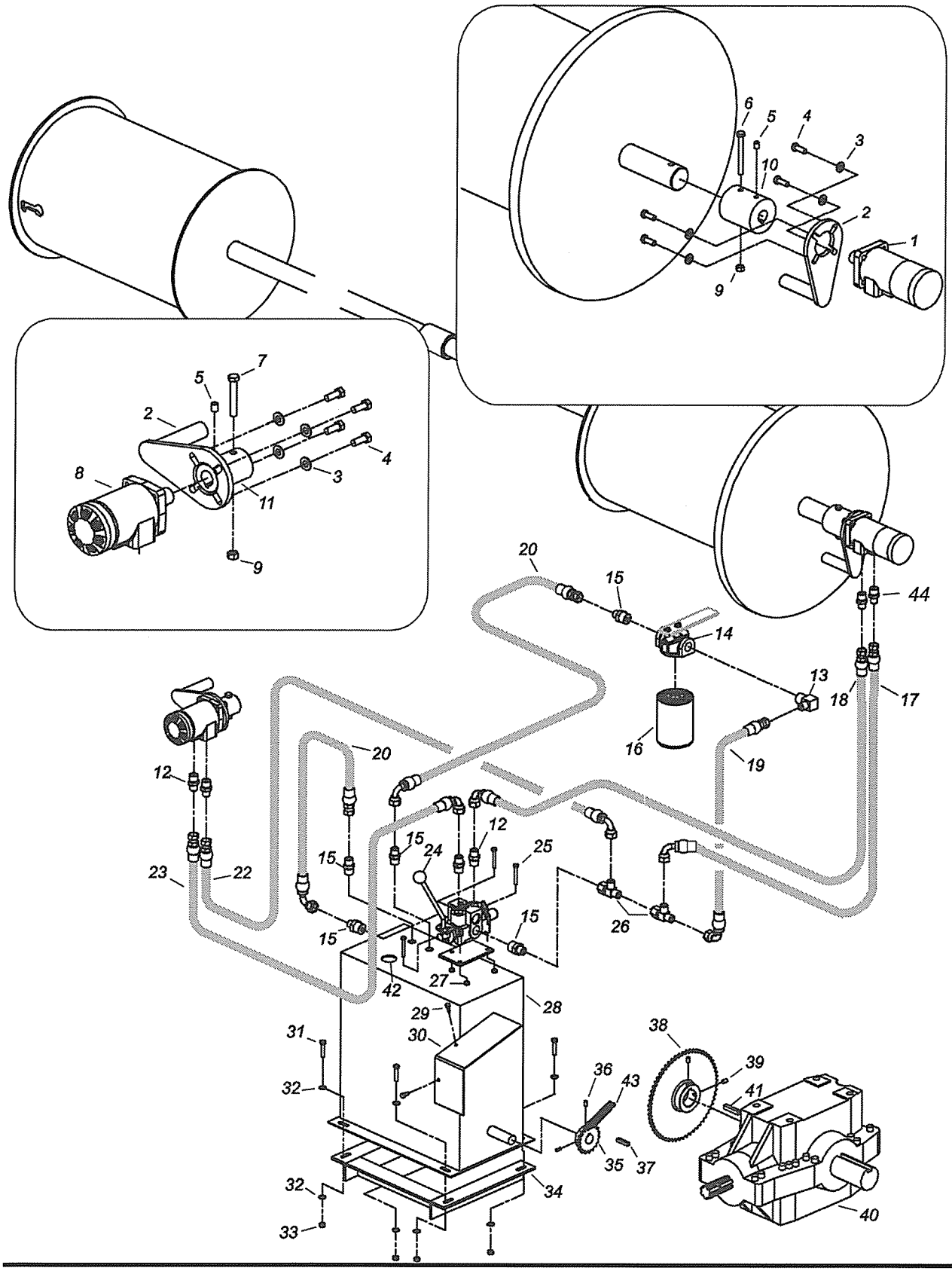

HYDRAULIC PACKAGE OPTION - G6060C

Item#	Part#	DESCRIPTION	Qty.	Remarks
1	1541054	Motor, Hydraulic	1	
2	6008011	Mount, Hydraulic Motor	1	
3	ref.	Washer, Flat	4	3/8 NOM
4	ref.	Cap Screw, Hex Head	4	3/8-16 UNC x 1 G5
5	ref.	Screw, Set	1	3/8-16 UNC x 1/2
6	ref.	Cap Screw, Hex Head	1	3/8-16 UNC x 3-1/2 G5
7	ref.	Cap Screw, Hex Head	1	3/8-16 UNC x 2-1/2 G5
8	1541780	Motor, Hydraulic	1	
9	ref	Nut, Hex	1	3/8-16 UNC Nyloc
10	1030014	Coupling, Cable Rewind	1	
11	6008004	Coupling, Conveyor Motor	1	
12	1541649	Fitting, Hydraulic	6	
13	1541758	Fitting, Hydraulic	1	
14	1541757	Base, Filter	1	
15	1541759	Fitting, Hydraulic	3	
16	1540167	Filter, Hydraulic Oil	1	
17	1541504	Hose Assembly 99"	1	
18	1541504	Hose Assembly 108"	1	
19	1541609	Hose Assembly 15"	1	
20	1541503	Hose Assembly 15" (2 hoses)	1	
22	1541609	Hose Assembly 70"	1	
23	1541609	Hose Assembly 66"	1	
24	1541648	Valve, Brand	1	
25	ref.	Cap Screw, Hex Head	3	1/4-20 UNC x 2 G5
26	1541608	Fitting, Hydraulic	2	
27	ref.	Nut, Hex	3	1/4-20 UNC Lock
28	1541032	Pump, Hydraulic With Tank	1	
29	ref.	Screw	2	1/4 Self Tap x 1
30	6012003	Guard, Hydraulic Pump Chain	1	
31	ref.	Cap Screw, Hex Head	4	5/16-18 UNC x 1-1/2 G5
32	ref.	Washer, Flat	8	5/16 NOM
33	ref.	Nut, Hex	4	5/16-18 UNC Lock
34	6012001	Mount, Hydraulic Pump Williams	1	
35	1520759	Sprocket	1	
36	1550262	Set Screw, Sprocket	2	
37	ref.	Key	1	1/4 x 1/4 x 2
38	1520760	Sprocket	1	
39	ref.	Set Screw, Sprocket	2	3/8 x 1/2 SS
40	1520050	Gearbox	1	
41	ref.	Key	1	3/8 x 3/8 x 2
42	1500686	Cap, Breather Williams Pump (Not Shown)	1	
43	1520761	Chain, Roller	1	
44	1541605	Fitting, Hydraulic	4	

HYDRAULIC PACKAGE OPTION - G6070C

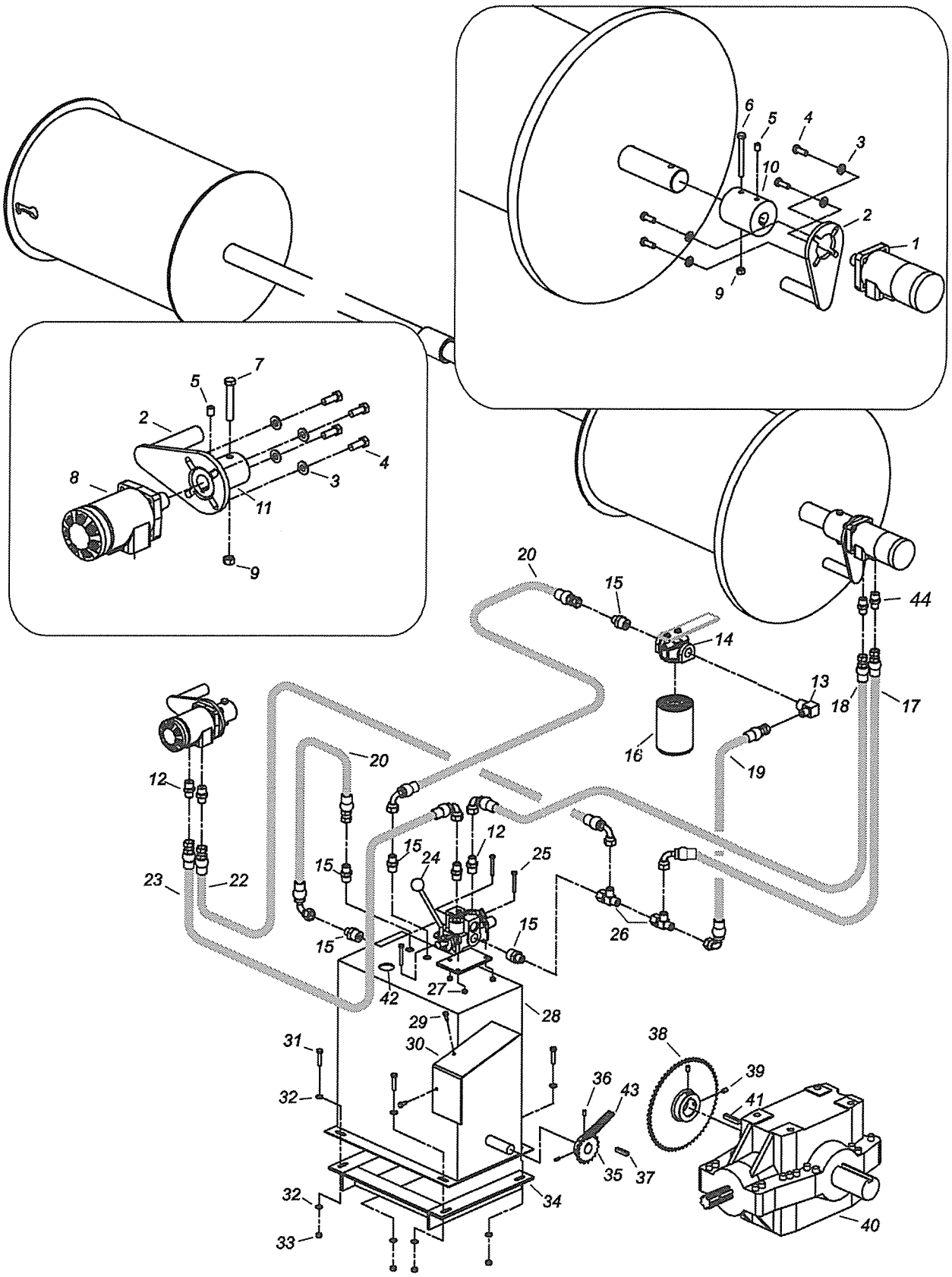

HYDRAULIC PACKAGE OPTION - G6070C

Item#	Part#	DESCRIPTION	Qty.	Remarks
1	1541054	Motor, Hydraulic	1	
2	6008011	Mount, Hydraulic Motor	1	
3	ref.	Washer, Flat	4	3/8 NOM
4	ref.	Cap Screw, Hex Head	4	3/8-16 UNC x 1 G5
5	ref.	Screw, Set	2	3/8-16 UNC x 1/2
6	ref.	Cap Screw, Hex Head	1	3/8-16 UNC x 3-1/2 G5
7	ref.	Cap Screw, Hex Head	1	3/8-16 UNC x 2-1/2 G5
8	1541780	Motor, Hydraulic	1	
9	ref	Nut, Hex	1	3/8-16 UNC Nyloc
10	1030014	Coupling, Cable Rewind	1	
11	6008004	Coupling, Conveyor Motor	1	
12	1541649	Fitting, Hydraulic	6	
13	1541758	Fitting, Hydraulic	1	
14	1541757	Base, Filter	1	
15	1541759	Fitting, Hydraulic	3	
16	1540167	Filter, Hydraulic Oil	1	
17	1541604	Hose Assembly 99"	1	
18	1541604	Hose Assembly 108"	1	
19	1541609	Hose Assembly 15"	1	
20	1541503	Hose Assembly 15" (2 hoses)	1	
22	1541609	Hose Assembly 70"	1	
23	1541609	Hose Assembly 66"	1	
24	1541648	Valve, Brand	1	
25	ref.	Cap Screw, Hex Head	3	1/4-20 UNC x 2 G5
26	1541608	Fitting, Hydraulic	2	
27	ref.	Nut, Hex	3	1/4-20 UNC Lock
28	1541032	Pump, Hydraulic With Tank	1	
29	ref.	Screw	2	1/4 Self Tap x 1
30	6012003	Guard, Hydraulic Pump Chain	1	
31	ref.	Cap Screw, Hex Head	4	5/16-18 UNC x 1-1/2 G5
32	ref.	Washer, Flat	8	5/16 NOM
33	ref.	Nut, Hex	4	5/16-18 UNC Lock
34	6012001	Mount, Hydraulic Pump Williams	1	
35	1520759	Sprocket	1	
36	1550262	Set Screw, Sprocket	2	
37	ref.	Key	1	1/4 x 1/4 x 2
38	1520760	Sprocket	1	
39	ref.	Set Screw, Sprocket	2	3/8 x 1/2 SS
40	1520050	Gearbox	1	
41	ref.	Key	1	3/8 x 3/8 x 2
42	1500686	Cap, Breather Williams Pump (Not Shown)	1	
43	1520761	Chain, Roller	1	
44	1541605	Fitting, Hydraulic	2	

HYDRAULIC CONVEYOR LIFT

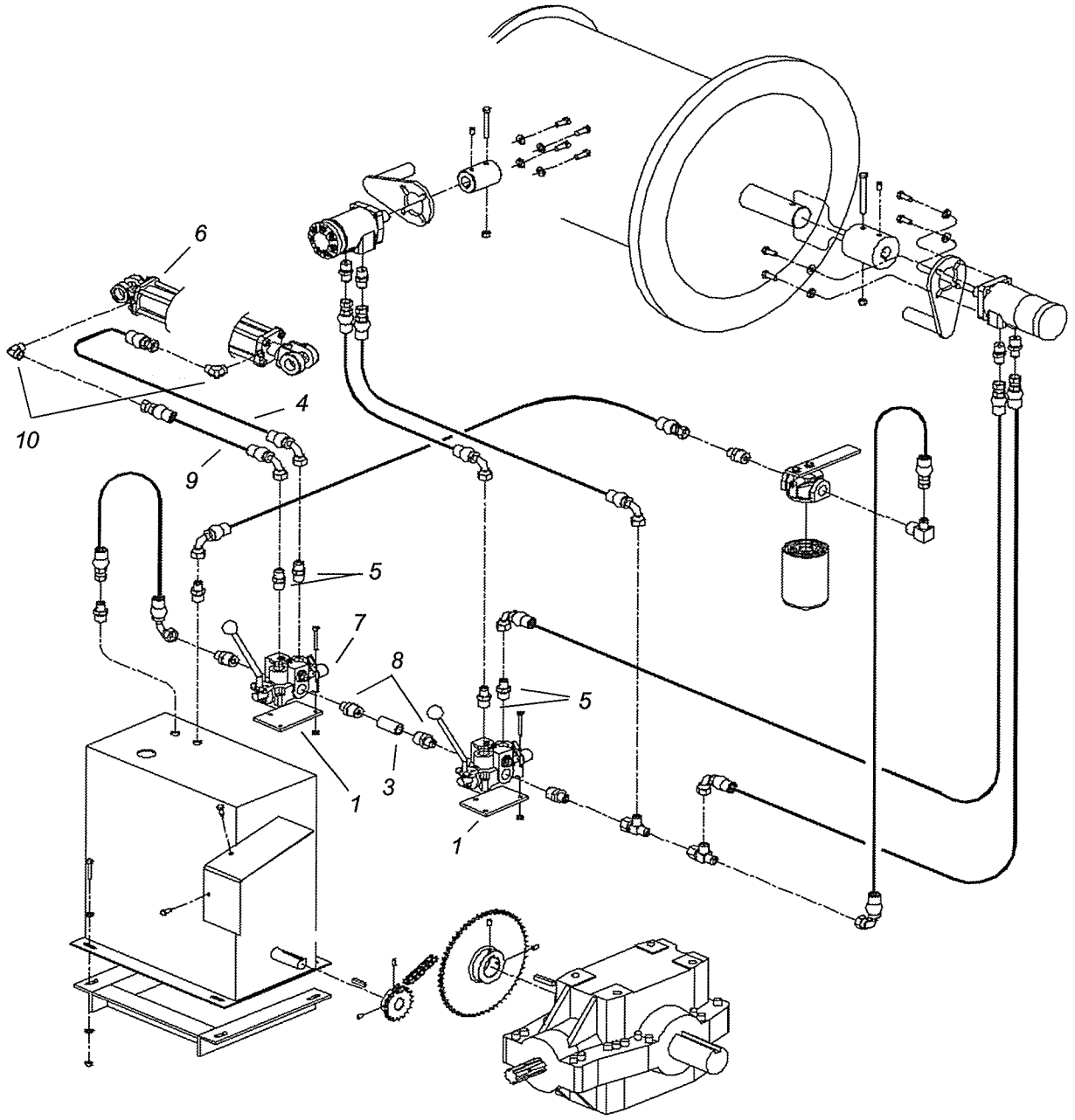

HYDRAULIC CONVEYOR LIFT

Used On Legend
A - All Models B - G6060
C - G6070 D - PB6000

Item#	Part#	DESCRIPTION	Qty.	Remarks
1	1120006	Bracket, Valve Mount	2	B, C
2	1120035	Mount, Hyd. Cylinder (Not Shown)	1	B, C
3	1541192	Fitting, Hyudraulic	1	B, C (see below)
4	1541616	Hose, Assembly	1	B, C
5	1541649	Fitting, Hydraulic	2	B, C
6	1541755	Cylinder, Hydraulic	1	B, C
7	1541777	Valve, Hydraulic	1	B, C - left
	1541648	Valve, Hydraulic	1	B, C - right
8	1541782	Fitting, Hydraulic	2	B, C (see below)
9	1541806	Hose, Assembly	1	B, C
10	1541893	Fitting, Hydraulic	2	B, C
ref	6008074	Mount, Hydraulic Cylinder	1	B, C (Not Shown)
ref	2101001	Tubing	2	B, C (Not Shown)
ref	8000009	Options Kit	1	B, C (Not Shown)
ref	1541973	Fitting, Hydraulic This Item Replaces Items 3 and 8	1	B, C (Not Shown)

SINGLE CABLE DRUM BRAKE ASSEMBLY

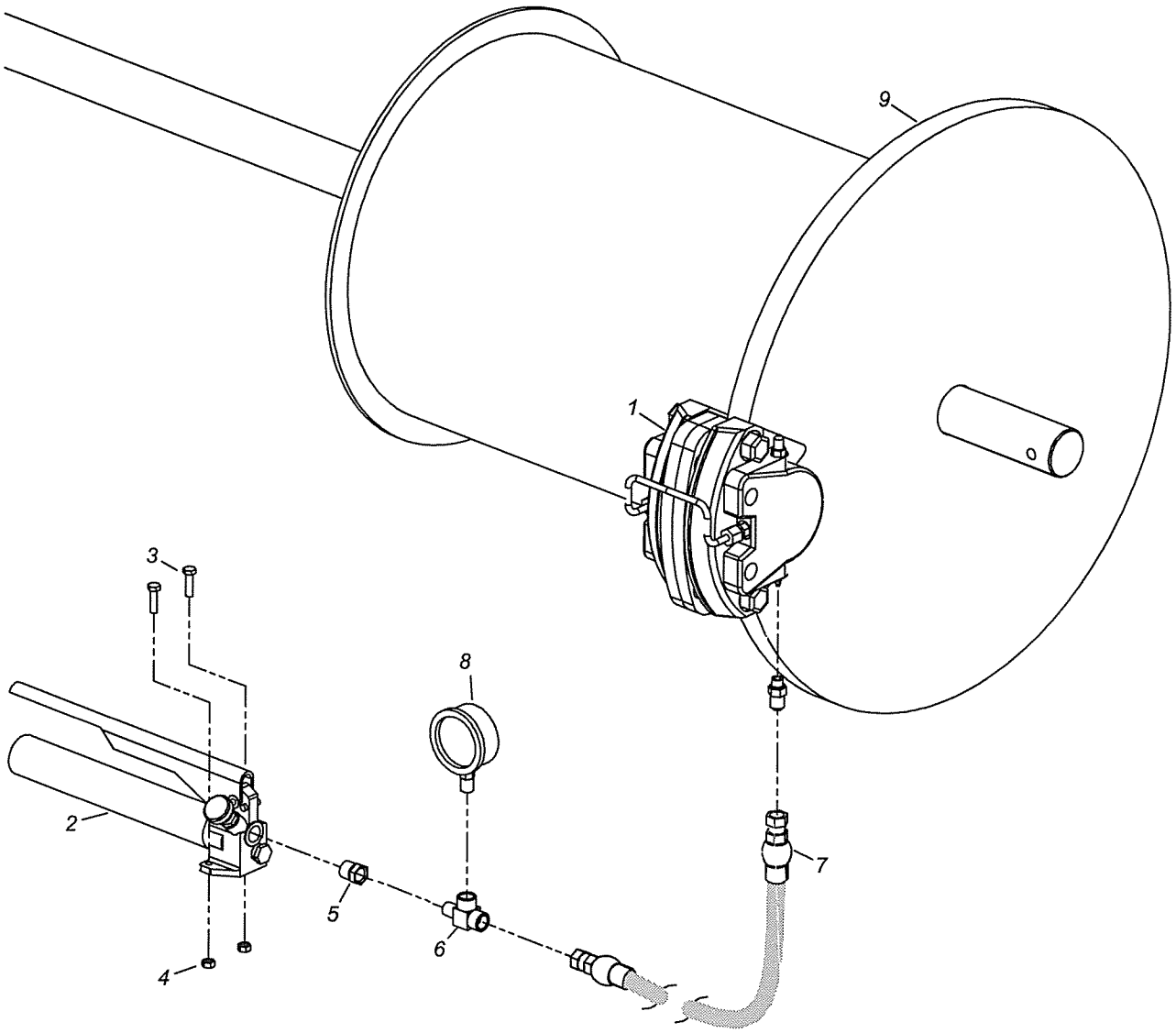

SINGLE CABLE DRUM BRAKE ASSEMBLY

Used On Legend
A - All Models B - G6060
C - G6070 D - PB6000

Item#	Part#	DESCRIPTION	Qty.	Remarks
1	1501348	Brake, Mico Disk	1	B, D
2	1502224	Pump, Hand	1	B
	1541231	Pump, Hand	1	D
3	ref.	Capscrew, Hex Head	2	1/4-20 UNC x 1 G5
4	ref.	Nut, Hex Lock	2	1/4-20 UNC
5	1542021	Fitting, Hydraulic	1	B, C
	1540397	Fitting, Hydraulic	1	D
	1541121	Valve, Needle	1	A
6	1540481	Fitting, Hydraulic	1	A
7	1541282	Hose Assy, Hyd. Brake Pump	1	B, D
8	1500142	Gauge, Hydraulic Pressure	1	A
9	ref.	Cable Drum Assembly	1	
10	1541283	Fitting, Hydraulic	1	A
11	1500294	Pad, Brake (not shown)		A
ref	6003001	Bracket, Mico Brake	1	A
ref	6008004	Bracket, Mico Brake	1	A

DOUBLE CABLE DRUM BRAKE ASSEMBLY

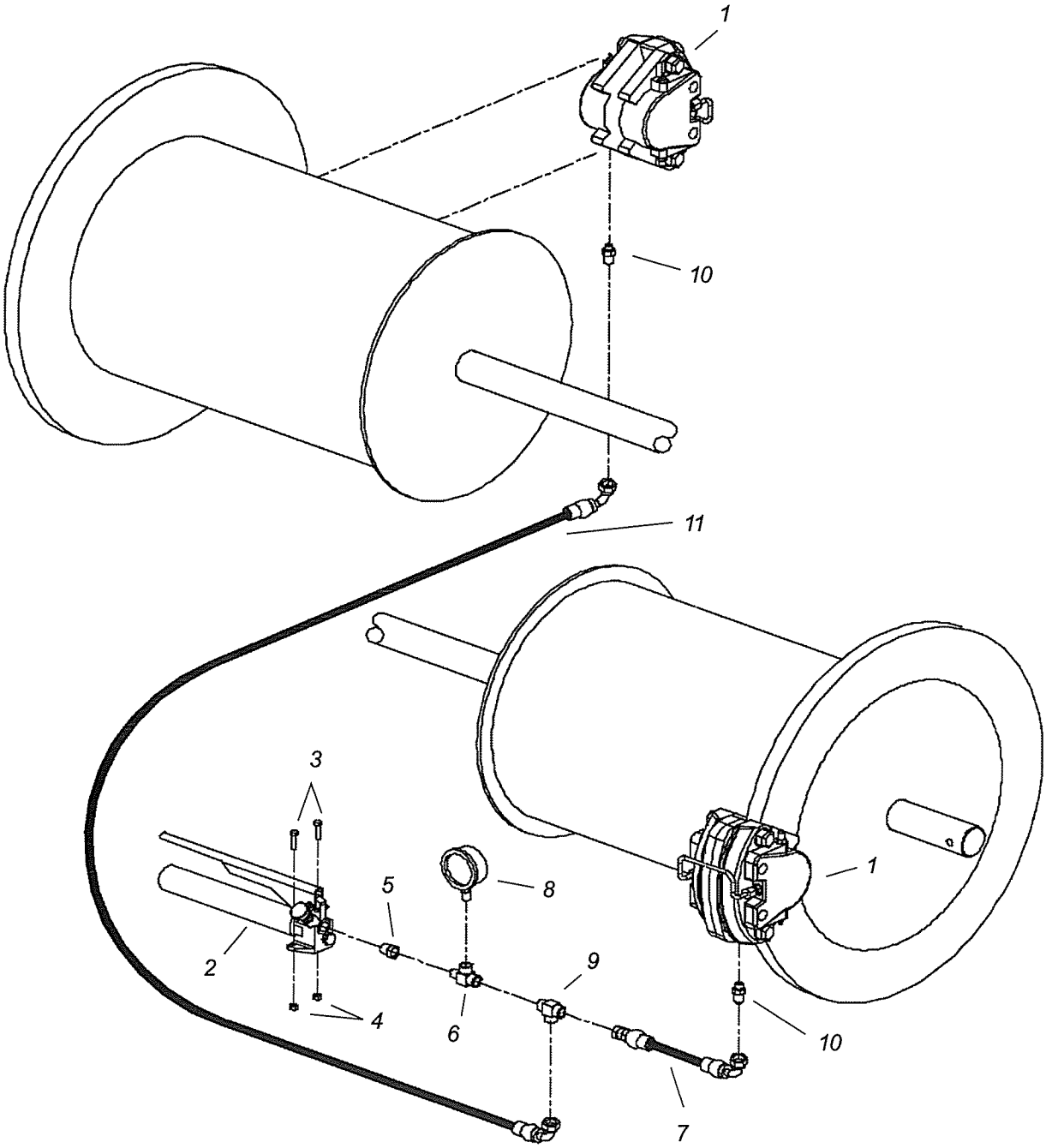

DOUBLE CABLE DRUM BRAKE ASSEMBLY

Used On Legend
A - All Models B - G6060
C - G6070 D - PB6000

Item#	Part#	DESCRIPTION	Qty.	Remarks
1	1501348	Brake, Mico Disk	2	C
2	1502224	Pump, Hand	1	A
	1541121	Valve, Needle	1	A
	1542021	Adapter	1	A
3	ref.	Capscrew, Hex Head	2	1/4-20 UNC x 1 G5
4	ref.	Nut, Hex Lock	2	1/4-20 UNC
5	1542021	Fitting, Hydraulic	1	A
6	1540481	Fitting, Hydraulic	1	A
7	1541948	Hose Assembly Hyd. Brake	1	C
8	1500142	Gauge, Hydraulic Pressure	1	A
9	1540734	Fitting, Hydraulic	1	C
10	1541283	Fitting, Hydraulic	2	C
11	1541949	Hose Assembly Hyd. Brake	1	C
ref	1541404	Hose Kit	1	C (Items 7 & 11)

GANDY

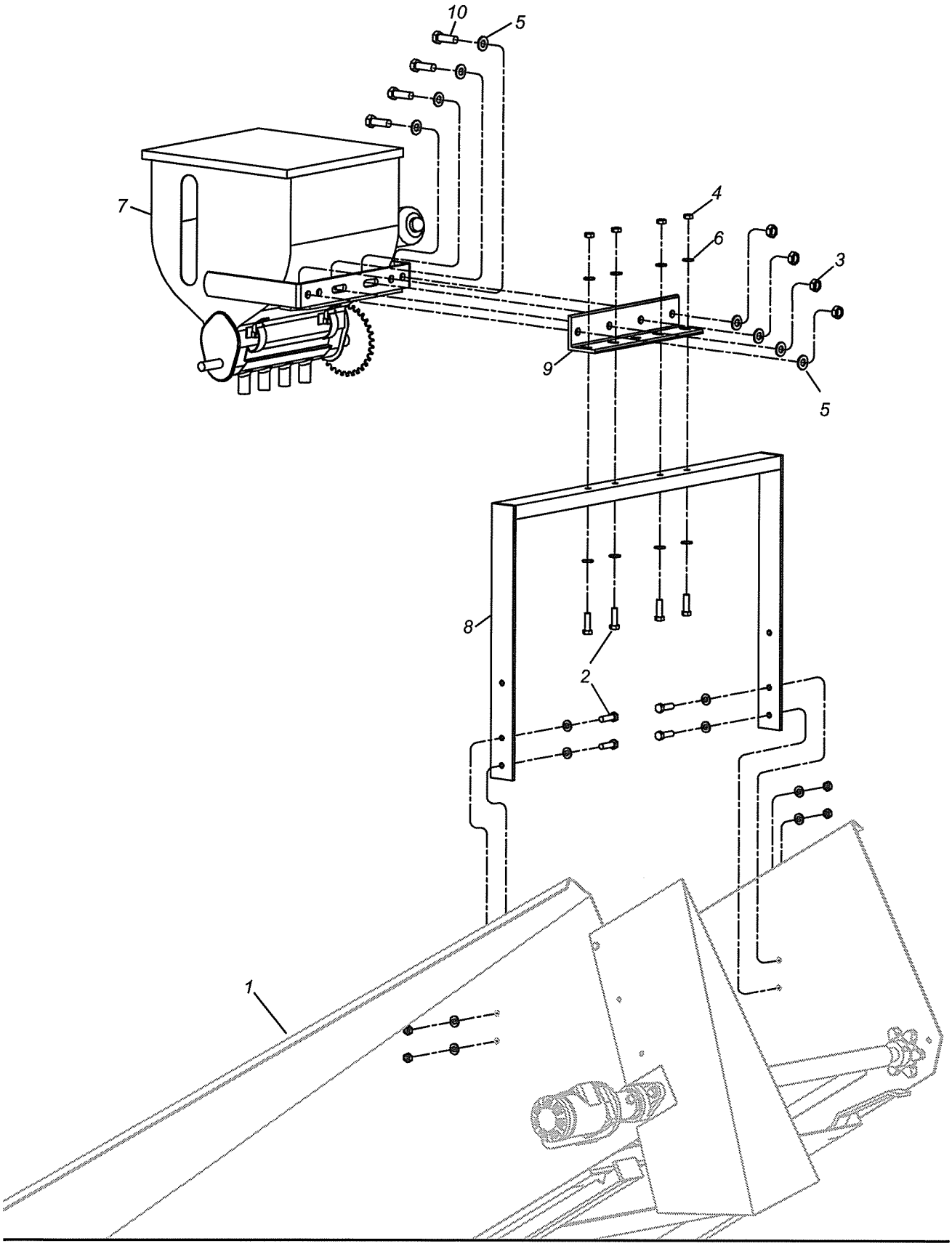

GANDY

Used On Legend
A - All Models B - G6060
C - G6070 D - PB6000

Item#	Part#	DESCRIPTION	Qty.	Remarks
1	ref.	Conveyor		
2	ref.	Cap Screw, Hex Head	8	3/8-16 NC x 1 G5
3	ref.	Nut, Hex	4	1/2-13 NC
4	ref.	Nut, Hex	8	3/8-16 NC
5	ref.	Washer	8	1/2
6	ref.	Washer	16	3/8
7	1500005	Gandy Applicator 4 Hole	1	B, C
	1500004	Gandy Applicator 2 Hole	1	B, C
8	6012006	Mount, Gandy Applicator	1	B, C
9	1120038	Bracket, Gandy Applicator	1	A
10	ref.	Cap Screw, Hex Head	4	1/2-13 NC x 1-1/4 G5
ref	8000003	Gandy Kit	1	

MISCELLANEOUS

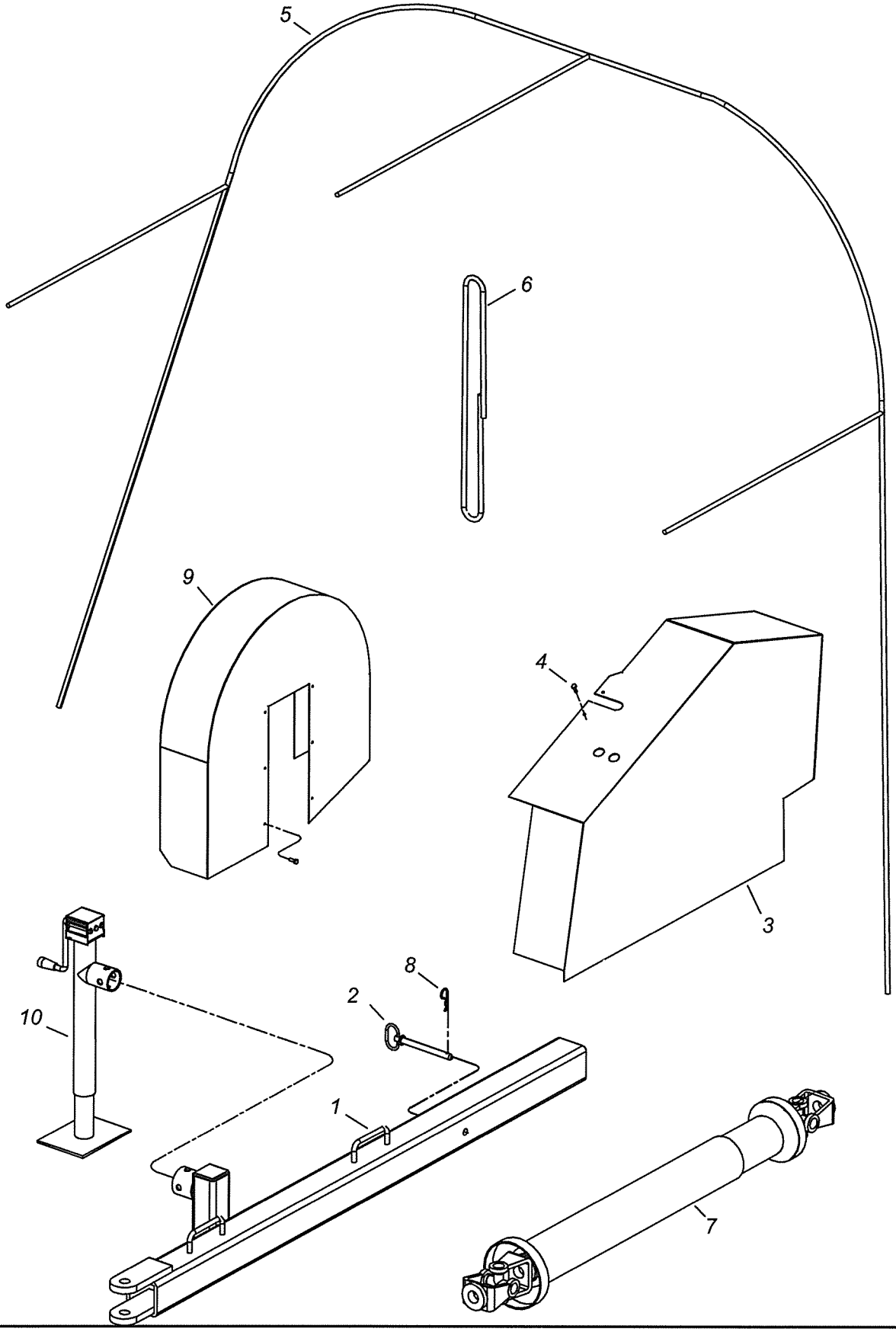

MISCELLANEOUS

Used On Legend
A - All Models B - G6060
C - G6070 D - PB6000

Item#	Part#	DESCRIPTION	Qty.	Remarks
1	6011009	Hitch, Field 8'-9'	1	B, D
	6011010	Hitch, Field 10'	1	C
2	1550172	Pin, Hitch	1	A
3	6002031	Guard, Rotor Chain	1	B, D
	6002040	Guard, Rotor Chain	1	C
4	ref.	Screw, Slotted Hex Head Self Tapping	8	#14 x 3/4
5	1560000	Bungee Cord, Tunnel	1	A
6	1560001	Bungee Cord, Bag Pan	2	A
7	1500386	Shaft, PTO	1	B
	1500385	Shaft, PTO	1	C
8	1550169	Pin, Hair	1	A
9	6003030	Guard, Cable Drum Brake	1	B, D
		Guard, Cable Drum Brake	2	C
10	1501398	Jack, Manual 15" Square Mount	1	A
	1560004	Bungee Cord Kit	1	A (Items 5 & 6)

THIS PAGE INTENTIONALLY LEFT BLANK

The 3M's of Silage

MANAGEMENT

MATURITY

Moisture

Table of Contents

3M's of AG-BAG® SILAGE

The "3M's of Ag-Bag® Silage" represent documented methods and technology of good silage making. Ensiling has proven to be the most efficient method of storing and preserving the nutrient value of your crops. We invite you to benefit from proven methods and profit-making concepts. Read on, it can change your future.

THE ART OF MAKING EXCELLENT SILAGE

1. Silage making is a science, that incorporates good management practices. Although many factors affect the profitability of a farming operation, forage quality is definitely on of the most important.
2. It's an accepted fact that rapidly fermented, high moisture feed retains a higher nutrient value than any other method of harvesting and storing crops.
3. By understanding the basics of the fermentation process and using good management practices, you can aid nature in achieving a rapid, efficient fermentation, which preserves more of the valuable nutrients in your forage crops.
4. By learning how to consistently make excellent silage, (The silage referred to in this publication is fermentable feed compacted and stored in an airtight Ag-Bag® bag) it can lead to a greater production of meat and milk.
5. A good anaerobic fermentation improves the palatability of feed. The fermentation process using the Ag-Bag® system is very similar to the digestion process in the first stomach of cattle. Well fermented silages are a natural feed for cattle. It's very much like putting your animals on green pasture year round.

The quality of silage is largely determined by three things:

Dedication

Preparation

Execution

3M #1 – MANAGEMENT

THE SOIL

The soil should be fertile and pH balanced to insure good germination. Good soil management always produces the highest quality crops.

THE SEEDS

High quality seed designed to produce well in your area, for length of season and weather considerations are a must. You can't produce crops any better than the seeds you plant.

THE ENSILING PROCESS

Silage is a feedstuff resulting from the preservation of green forage crops by acidification. Acidification is the result of the fermentation of the forage in the absence of oxygen. Research has proven conclusively that the process of ensiling green crops is the most efficient method of storing and preserving the nutritional value of crops for feeding to ruminant animals. The breaking down of the cellulose and lignin of the plant cells by fermentation helps make the forages more digestible, thus producing more value. In some cases, the forages are more digestible than green feeding or pasturing . All types of forages can be fermented and successfully bagged.

FERMENTATION

The miracle of fermentation starts with the bacterias – enzymes – sugars – proteins and an oxygen-free environment.

1. ***Respiration*** – When a forage plant is harvested and placed in an Ag-Bag® bag it is alive and therefore, respiring actively. Even though the forages are packed extremely tight some air is unavoidably trapped in the mass. The oxygen is utilized by the aerobic bacteria existing in the crop, and by the breakdown of sugar in the plant cells.
2. ***Aerobic Fermentation*** – This phase of the ensiling process is called *aerobic respiration*. End products of this phase of the process are *carbon dioxide* and *heat*. These reactions are not complete and other end products are produced

such as acetic and butyric acids later used by lactobacilli and streptococci to produce lactic acid. Photeolytic enzymes from the plant are also active in this phase, and they break down some of the plant proteins into amino acids. This phase of respiration is complete when the oxygen in the mass is completely depleted, and the action of the *anaerobic microorganisms* begin. Aerobic respiration lasts from 5 to 10 hours under good storage conditions.

THE FERMENTATION STARTS

Phase 1 – This is a relatively short phase characterized by the beginning of anaerobic microorganism activity. The cell contents diffuse out of the cell due to the chopping of the plant, and are used by bacteria clinging to the plant when placed in the bag. The formation of acetic and butyric acids are characteristic of this phase. The life of organisms producing these acids is short due to the drop in pH produced by their own activity.
Phase 2 – This phase is the initiation of the lactic acid fermentation. This activity is well underway at the end of three days and the establishment of this activity completes Phase 2.
Phase 3 – Lactic acid production is continued in this phase and reaches it's peak which should be 3.0 - 13.0 percent of the dry matter and a pH that is constant at about 4.0. No further changes occur, and the silage is fermented if the pH remains between 4.0 and 4.2 for corn silage, and 4.0 and 5.0 for other crops, and no air is allowed to enter the mass.
Phase 4 – This is a stage of quiescence or inactivity. The material has a pH of 4.0 - 4.5 and if water and oxygen remain excluded, no further chemical changes occur and the material will remain in this preserved state almost indefinitely.
Phase 5 – This is an undesirable phase. If the pH does not drop below approximately 4.2, or if air is allowed to enter the silage, butyric acid production is initiated, converting the soluble carbohydrates and lactic previously formed to butyric acid which is characteristic of spoiled silage. Also, proteins are broken down to amino acids and these are further degraded to other nitrogenous compounds, which may lead to a reduction in a level of digestible protein.

FERMENTATION AND INOCULANTS

The general knowledge of the biochemistry and microbiology of silage fermentation has increased tremendously in the last 25 years. Silage is a product of anaerobic fermentation. It involves the conversion of water soluble carbohydrates (sugars) to lactic acid, which drops the pH to a level sufficient to inhibit any further biological activity (change) in the ensiled material when maintained under anaerobic conditions.
In most circumstances, good silage is achieved by encouraging the dominance of lactic acid bacteria (the good guys), and discouraging the activity of clostridia and yeats (the bad guys). In the initial stages of ensiling, plant respiratory enzymes (bad ones) oxidize soluble carbohydrates, resulting in heat production and decreased amount of sugars available for fermentation.

PRINCIPLES OF ENSILING

Aerobic phase. As crops are put into the bags, two things start to happen: respiration and proteolysis (enzyme action), which are attributed to the activities of plant enzymes. Respiration is the complete breakdown of a substance to carbon dioxide and water, using oxygen. Harvesting of the forage crushes and chops the plant, damaging the cells and releasing many plant enzymes. Some of the enzymes, amylase and hemicellulase, break down starches, increasing the level of sugars in the plant. Of these processes, respiration is most detrimental to silage quality because:
1. Respiration causes a loss of dry matter.
2. The plant uses up existing plant sugars during respiration. The loss of sugar is crucial at this point as it affects preservation and nutritional value. Sugars are the principal food for the lactic acid bacteria that ferment the crop and a loss of sugar also reduces the energy values.
3. Prolonged aerobic conditions allow yeasts and molds to grow to high levels. Large populations of these microorganisms can predispose the silage to heating when the bag is opened for feed-out.

Fermentation phase. Once anaerobic conditions are attained, several processes begin to happen. The plant cells start to breakdown. In wet forages this takes place in several hours. In dry forages, it can extend over a day or more. This process provides sugars to feed the naturally occurring lactic acid producing bacteria. It also releases a variety of plant enzymes, providing extra sugars. Many of the LAB (lactic acid bacteria) and enterobacteriaceae can grow in the presence of oxygen; however, they grow much faster under anaerobic conditions and are very efficient at producing acids that start to lower the pH. The most important bacteria for ensiling is the LAB (lactic acid producing bacteria), which converts sugars to lactic acid. There are primarily two kinds of bacteria: homofermenative and heterofermenative. The homofermenative produce only lactic acid. The heterofermenative produce ethanol or acetic acid plus carbon dioxide, in addition to lactic acid. With a natural fermentation, competition between the two bacteria determines the kind of fermentation. As lactic acid is stronger than acetic, it is more desirable. The use of bacterial inoculants helps assure a dominance of lactic acid bacteria.

Stable phase. The period of active fermentation lasts between two weeks and two months. For forages ensiled in normal moisture ranges (50-65%), active fermentation is over in three weeks. (The use of a bacterial inoculant will speed this up). Once the pH is reduced to about 4.0 the bacteria quit growing and the silage is stable as long as it's oxygen-free.

Many factors effect fermentation, among them moisture, maturity, weather conditions, fertilizer, bacterial count and water soluble carbohydrates (sugars). We cannot control the weather or the bacterial counts, but with proper management and the use of Ag-Bag® Plus! we can help cope with the other factors.

Fermentation is an exact science. There are many fermented products in the world today, such as pickles, beer, yogurt, wine, cheese, sauerkraut and silage. Silage is the largest fermented product by volume in the world, and is the most inconsistent in quality. The reason other products consistently have a good fermentation is because of two things. One, a controlled environment and two, they use bacteria to aid in the fermentation. The Ag-Bag® system is the controlled environment, Ag-Bag® Plus! inoculant is the necessary bacteria and enzymes to control the fermentation.

Why use Ag-Bag® Plus!? There are good and bad bacteria naturally found on your plants. University research indicates that for every one lactic acid producing bacteria (good guys) there are ten spoilage causing bacteria (bad guys). This 10 to 1 ratio is not very comforting when you are trying to harvest the best possible silage.

By adding Ag-Bag® Plus! inoculant, you are overwhelming the crop with fast growing, aggressive lactic acid producing bacteria. This creates an environment where the yeast, molds and clostridia are inhibited. If the sugars in the plants are low, they will not feed the natural bacteria on the crop.

Ag-Bag® Plus!, the unique inoculant where each bacteria is micro-encapsulated. Each bacteria is coated with a sugar and an enzyme for an immediate source of energy to feed the bacteria for even faster growth. This has proven to be a more efficient way to increase lactic acid production rather than adding the sugar separately. As a rule, 1 pound of lactic acid is equal to 2 pounds of shelled corn in energy.

There are many different strains of bacteria used in inoculants today. The most important thing to look for is a bacteria that is viable (alive). Ag-Bag® Plus! silage inoculant contains the most aggressive and technologically advanced bacteria on the market today, and Ag-Bag® is constantly improving the quality of bacteria and enhancing the product as new technology becomes available.

The strains of bacteria that are used in Ag-Bag® Plus! inoculant have special qualities to enhance silage. First, there are four strains of bacteria and two enzymes. The *streptococcus faecium* works in both an aerobic and anaerobic environment and grows well during the initial stage of fermentation while oxygen is still present. The *pediococcus* bacteria grow well at low temperatures, like we have in bagged feed. The *lactobacillus plantarum* and *lactobacillus casei* are the finishers and are chosen for their fast production of lactic acid and their stability. The two enzymes, amylase and

cellulase, were chosen because they break down the plant cell structure, making the feed more digestible and releasing more natural plant sugars. The results are a much faster fermentation and more preserved nutrients. It normally takes 21 days for feed to complete the fermentation process, but with the use of our silage inoculant the fermentation process is usually completed in 5 - 7 days. Because of the decreased fermentation time, the faster pH, and temperature reduction, not as many nutrients are used up during the fermentation process. The results are more preserved dry matter, lower pH, lower temperature, higher lactic acid production, longer bunk life and an increased feed conversion efficiency.

Ag-Bag® Plus! can be applied as a granular or a liquid. Ag-Bag® Plus! granular comes in a 50# bucket to treat 100 tons. It is applied at ½ lb. per ton of forage. Ag-Bag® Plus! soluble is available in a foil pouch to treat 50 or 100 tons. It is mixed with water and applied as a liquid. Instructions are on the labels.

LENGTH OF CUT

The length of cut on legumes and grasses, as a good rule of thumb, is 3/4" long. This allows plenty of roughage in the diet of the animals to take care of rumen activity. Corn silage should be ½" cut to keep oversize to a minimum. Unless using a kernel processor. See manufacturer's recommendations.

ADJUSTING THE CHOPPER

It's very important that the shear bar have a good sharp edge and adjusted up according to the owner's manual. Round edges cost feed quality and dollars.

The knives should be sharpened often to insure a good clean cut of the forage. Tearing the material apart causes extensive cell damage to the plant. Extra long forages do not feed well and are left in the bunk. A set shear bar, will in most cases allow you to go through the field one gear higher and cut your fuel consumption considerably. There are a lot of benefits to consider by proper machine adjustment. Remember – *Dedication*, *Preparation*, and *Execution*.

BAG PLACEMENT

As with all feed storage systems, it is very important to have an appropriate base. The base for a bag feed storage system should be well-drained with a smooth surface. Suggested base materials include – sand, cement, 4-5" of ag lime, geoweb system, soil cement, agri fabric with 4-5" of crushed stone, road re-grind, 50% crushed rock and 50% rock dust, dry cement spread with a hand spreader and watered down.

PACKING THE BAG

The mechanical packing by the bagger has given a lot more freedom in making good silage. The bagger can exert as much as 15,000# pressure as the feed is being compacted. This compaction allows the silage to have a slightly longer chop (3/4") than could be used in pit silage. The oxygen is literally extruded out of the feed. This insures a good pack on the forages every time, it's not left to chance. The denser the packing in the bag, the less oxygen is available to cause heating, the faster the fermentation will occur resulting in higher feed quality.

SEALING THE BAG

As soon as you are done filling the Ag-Bag® bag and have moved the bagger, seal the bag immediately so the anaerobic bacteria can begin to work. Ag-Bag® recommends MasterSeal® plastic strip. Lay the bag end out flat and seal according to instructions. This is an effluent and gas tight seal, and more effective than traditional methods using baling twine or 2' x 4's.

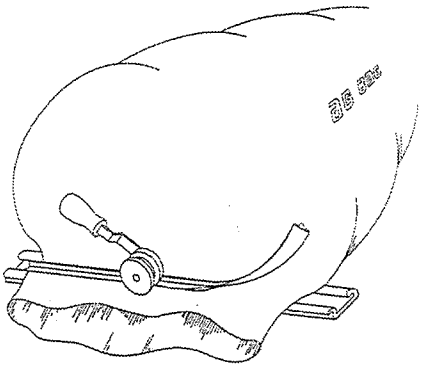

VENTING THE BAG

Some feeds produce a large amount of nitrogenous oxide. This creates a gas from the respiration of the plants in the bag. It's a perfectly normal process. In order for the gases to *escape* under *controlled* conditions, venting is a very important step in bagging. For that purpose, Ag-Bag® recommends and sells reusable vent valves instead of cutting exhaust ports that you must later tape shut.

Instructions for using the Ag-Bag® vent valve:
Take the cover off the vent tool. Insert the tool, with prongs up, into the cover by lining up the notches. Taking the threaded side of the valve, line up the notches and slide it over the top of the pronged end of the tool. (See illustration below.)

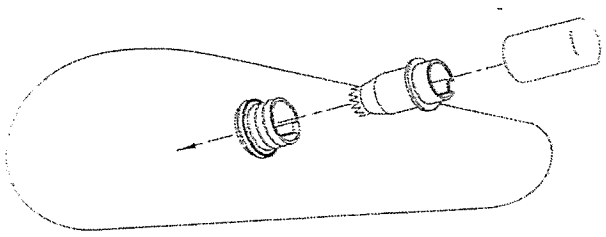

After you have located the spot where you want the vent to be installed, press the prongs of the tool into the plastic to create a hole. Push the tool through the hole and pull out leaving the threaded end sticking out. (See illustration below.)

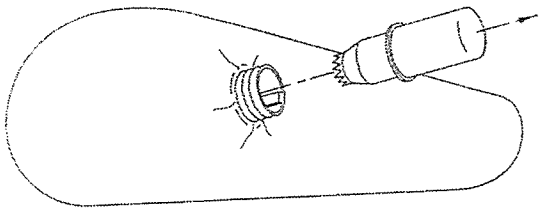

Turning the valve lid to the left, screw on tightly. (See illustration below.)

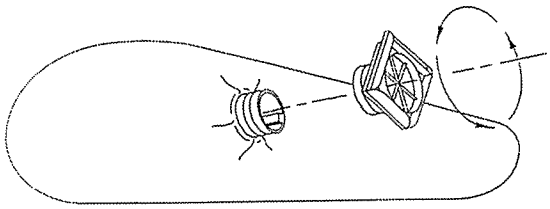

Slide the lid open enough to allow the gases to escape. Within 1-2 days, close lid and leave valve in until that end of the bag is fed out. NOTE: If exceptional gassing up occurs, you may leave the vent open for an additional day. Or, if you notice the bag puffing up again after shutting the valve, open up again until the gases recede, then close.

BANK YOUR BAGS

To avoid wind damage, use old rubber tires or other weighted material at the ends of the bag to keep loose plastic from flapping in the wind. The wind can cause plastic fatigue leaving small holes to allow oxygen to enter the feed. A little extra care at the start can make a difference in the feed quality - hold that loose plastic down.

DO'S AND DON'TS

1. *DON'T* get dirt in the feed going into the bag.
2. *DON'T* allow holes or damage to the bags to remain open.
3. *DON'T* place bags in a poorly drained area.
4. *DON'T* allow dogs, cats and other animals to get on the bags.
5. *DON'T* put feed up too dry or too mature.
6. *DON'T* put excessively wet forage in the bag.
7. *DON'T* allow the bagging machine to remain hooked up to the bag for long periods of time with feed still left in the hopper or tunnel.

1. *DO* protect the storage area from livestock.
2. *DO* inspect on a regular basis and mend holes with Ag-Bag® tape.
3. *DO* place bags on a well-drained, hard, level surface.
4. *DO* have your feed tested – to be able to mix and balance your ration.
5. *DO* ensile your crop at proper moisture and maturity.

6. *DO* number and date bags for ease of testing and recall of material ensiled.
7. *DO* place bags in accessible area for easy feed removal.
8. *DO* place bags side-by-side for blending of feeds.
9. *DO* remove more than 1' of feed per day from the face of the bag to prevent aerobic instability and heating problems.

3M #2 – MATURITY

HEAD CHOP GRAINS

A new process to harvest grains pioneered by Ag-Bag® International and their satisfied users is "head chopping" small grains using a "direct cut" head on a forage harvester and cutting off the top 4" of the plant. This allows the grower to make a high energy and a high moisture feed. At the time of harvest the grain is in the heavy dough stage and is still green.

Set the chopper on finest chop available and if possible use a recut screen and/or kernel processor to further (mill) the grain. This head chop grain feed will be within ½% of full protein of dry grain, it will have TDN from 64%-72% and will add about 12% fiber to your feeding rations. (An excellent way to harvest grain without the use of a combine.) It is recommended to use Ag-Bag® Plus! on this feed. The moisture level is low and requires the added bacteria to give a longer shelf life upon opening and feeding.

SNAPPED EARLAGE

This method of harvest allows you to snap the ears of the corn plant, cob and all. It's then run through the chopper with a recutter screen and/or kernel processor to process the feed to be put directly into the Ag-Bag® bag and should be fermented without further grinding of the grain.

The moisture level will be between 30-45% and may require the application of Ag-Bag® Plus! inoculant to speed up the fermentation of the snapped earlage. This helps slow down aerobic deterioration after opening the bag. It's then ready to feed to your animals after the 21-dayfermentation cycle. If Ag-Bag Plus is used, the grain will be ready to feed in a shorter time of 7-10 days.

FEEDING OUT OF THE BAG

Because of a higher residual sugar content in bagged feed, aerobic deterioration will occur if the bag is left open. It happens with all silage as it is exposed to oxygen. The small face of the bag gives you better feed out control.

Cut the Ag-Bag® bag open down the top center of the bag and lay it out flat on the ground. Moving the loader to one end of the plastic, drive loader tires onto the plastic using it as a base. With the loader bucket, loosen the silage starting at the top of the bag. As it loosens and falls on the plastic, use the loader bucket to scoop it up. Keeping the loader bucket as close to the ground as you can while not disturbing the plastic on the ground. The plastic will work to keep the silage from spilling. As you continue to remove the feed from the bag, shake the remaining feed to the center of the plastic. Operators can easily be trained in the proper feed-out techniques recommended by Ag-Bag® and minimize blowing plastic and feedout loss. (See diagram on pg.12)

The bag should be sized to fit your operation. Minimum daily face removal should be at least 1 foot back into the bag each day after opening. This will prevent heating of the feed from oxygen breakdown. For specific feeding rates, please view the chart below to estimate the tons of feed you need to use each day.

Harvesting at the right stage of maturity, harvest to get optimum total digestive nutrients (TDN), and harvest crops that average between 60-70% TDN is ideal to get maximum milk or meat production per acre.

WHAT S THE VALUE OF CORN SILAGE?

Some universities and research centers say that corn harvested as mature corn silage is the king of all crops as far as producing the most pounds of TDN per acre. A 20-ton-per-acre crop of corn silage, which would be near an equivalent of a 120 bushel an acre grain crop, would produce about 6 tons of dry matter per acre.

AT WHAT MATURITY DO WE CUT ALFALFA?

Cut when the plant still is over 20 percent protein. This is no later than the late bud stage (before any flowers appear). Go to the field and grab that flowering point. You can tell when the bud is getting very hard. In fact, at the very late stage you actually can see that small, little will become the flower. Start as early as midbud if you have a lot of hay to put in, especially with first crop. Once blossoms show, quality drops off very rapidly. Don't wait until the perfect time...it never seems to come. If it isn't raining and the weather looks acceptable, go ahead and cut.

Proper Bag Feed Out Technique For Large Operations

/ Cut the Ag-Bag bag open down the top center of the bag and lay it out flat on the ground.

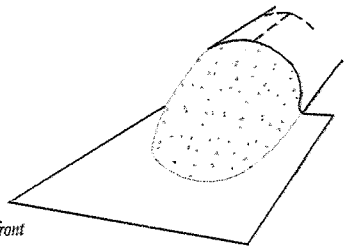

Prevent the plastic from hanging up in the loader bucket, drive the front wheels onto the plastic.

/ Tip the top of pile. This will loosen it up.

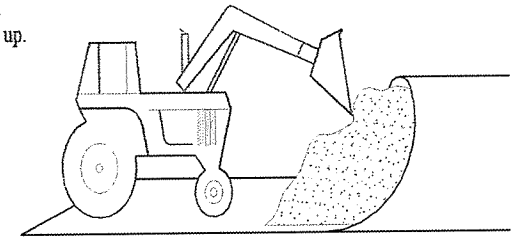

Lower the bucket 1 inch above the plastic.

/ Skim doze directly from the front.

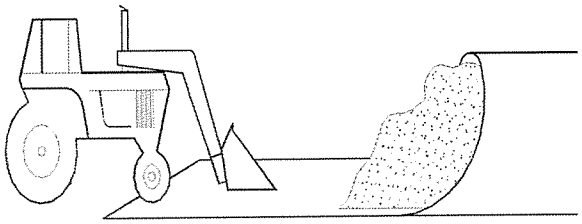

/ Lift the plastic edges and shake product back to the center of the bag.

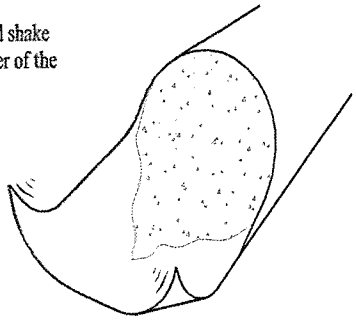

Suggested Daily Feed Out Rates

Winter Rates - October - April		
Bag Size	**Feet/Day**	**Tons/Day**
8'	1'	1
9'	1'	1-1/4
10'	2'	3
11'	2-1/4'	4
12'	2-1/2'	5-1/2

Summer Rates - May - September		
Bag Size	**Feet/Day**	**Tons/Day**
8'	2'	2
9'	2-1/4'	2-3/4
10'	2-1/2'	4
11'	2-3/4'	5
12'	3'	6-1/2

Bag Capacity Per Running Foot

Bag Size	Tons
8'	1
9'	1-1/4
10'	1-1/2
11'	1-3/4
12'	2-1/4

Cut Crop at the Proper Stage of Maturity

		% Crude Protein	% TDN
Corn Silage	Tassel	10.7	64.4
	Milk	8.0	69.0
	Glaze or Early Dent	8.0	71.0
	Full Dent	8.0	68.9
Alfalfa Silage	Bud Stage	22.1	61.7
	1/10 to 1/3 Bloom	20.4	63.4
	1/2 to 3/4 Bloom	18.2	58.9
	Past Bloom	12.3	49.8
Oat Silage	Boot Stage	15.3	65.8
	Late Milk to Early Dough	8.5	65.0
	Late Dough	8.3	63.5
Grass Silage	Pre-Bloom	20.4	73.2
	Spike	14.0	67.6
	Milk	12.1	65.0
	Dough	10.6	60.0
	Mature	5.3	52.7
Wheat Silage	Immature	24.0	63.5
	Flower	16.0	63.0
	Late Flower	6.7	51.3

Notice when cut at the right stage of maturity, the TDN values are all above 60-70% in feed value.

The Influence of State of Maturity on Corn Yield

Silking	1 Day	12 Days	25 Days	49 Days
Silage Weight (lbs. per acre)	16,000	25,000	34,000	40,000
Dry Matter (lbs. per acre)	5,400	8,300	11,700	13,600
Stalks and Leaves	93%	72%	53%	37%
Ears and Husks	7%	28%	47%	63%

How Harvesting Alfalfa Affects Digestibility, Consumption, Milk Production and Grain Requirements

Cutting Date	Dry Matter Digestibility	Daily Digestible Forage Consumption in lbs. per 1000-lb. Cow	Milk Production - Fat Corrected Lbs.	Amount of Grain Required - Lbs. Daily
Early Bud	66.8	23.0	42.5	3.0
	65.0	21.6	39.2	5.7
	63.1	20.2	34.0	8.4
	61.3	18.8	31.4	10.9
	59.4	17.4	26.5	13.5
	57.5	16.0	23.4	15.7
Full Bloom	55.8	14.7	19.5	18.2

3M #3 – MOISTURE

Ag-Bag® International recommends that forages be harvested at moisture levels ranging from 55-68%. This insures best fermentation and digestibility of TDNs. Wilting of most forages will be necessary to attain the desired moisture.
Note: For round or square bale silage, we recommend 45-55% moisture. Head chop grain should be harvested in the 30-40% moisture range. Snapped Earlage should be in the 30-45% moisture range. High moisture shelled corn should be in the 28-30% moisture range. One (1) ton of dry hay will equal three (3) tons of baglage (Rule of Thumb).

MOISTURE AND QUALITY

In addition to stage of maturity at the time of harvest, moisture (either too much or too little) is one of the most important factors that determines the quality of the final product of the ensiling process. *Other things being equal, losses with wilted silage are much lower than when the forages are ensiled as direct cut material at high moisture levels.* Silage cut above 70% moisture tends to increase the amount of clostridia in the forages. The clostridia starts to use up the proteins and soluble sugars, lessening the quality of the feed. This higher moisture feed can cause some acidosis in the cattle - since ensiling bacteria are more active in wetter feeds as the moisture wilt. Try to start bagging at 70% moisture (as soon as it doesn't make water) and balance your swathing with speed of bagging and hauling.

MOISTURE TESTING

There are lots of moisture testers on the market today. Some are electronic, others have probes, some cook the moisture out of the feed and leave the residue to weigh for accurate dry matter. Contact Ag-Bag® International for ordering a moisture tester. Another method used by some experienced Ag-Bag® users is the *Squeeze Ball Test.* To do this, grab a handful of chopped material and form a ball. Squeeze the material hard for 30 seconds. If you squeeze water out of the feed, it is above 75% moisture. If no water comes out when pressed and the material holds a tight ball and some moisture remains on your hand, it is from 65-70% moisture. If the ball comes apart slowly, it is close to 60% moisture. Under 50% moisture, the ball springs apart and does not stay together. Below this level (50-55%), the moisture is getting marginal for good fermentation.

DIRECT CUT

Some forages can be cut directly off the stump. EXAMPLE: a) An alfalfa crop that is very grassy or past 10-20% bloom. b) Most crops that are mature rather than very lush and young. c) Most grain crops in the dough stage can be direct cut if you are going to use whole plant or make Head Chop. For best results and better control of your moisture level in the various forage crops, it is best to swath and wilt. The ideal moisture level is 65-68% in forages and in corn silage. In colder climates it is advisable to lower the moisture level to 55-60% for those bags to be fed in extremely cold weather.

PLANNING YOUR MOISTURE

It requires some experience to maintain swather distance ahead of the chopper. There are many variables, i.e., First Cut, wet ground, doesn't dry out as rapidly, rainy conditions. Second Cut, hot and dry, may only require 2-3 hours wilt. Try to start bagging at 70% moisture (as soon as it doesn't make water) and balance your swathing with speed of bagging and hauling.

THE BEST BAG TO USE

Ag-Bag®'s bag is engineered to be the most scientifically prepared to deal with all the elements. The bag is made from polyethylene resins with ultraviolet inhibitors and special whiteners.
Tri-extruded, or bonded, together in 3 layers, the bag's white outer layer is extreme white to reflect the heat of the sun. In this layer are special ultraviolet inhibitors to give long life against the sun's rays. The clear inner layer is added for strength and elasticity.

Insist on using genuine Ag-Bag® bags for the best feed quality results.

It is critical to maintain an oxygen-free environment in the bag. To repair a tear or puncture in the bag, use the repair tape from Ag-Bag®. If a large tear happens, use spray adhesive around the tear area, apply a piece of used bag over the hole, and seal the patch with repair tape. Careful, periodic bag examinations will prevent spoiled feed. Bag management is a must to

Bag Code	Bag Size	Bags Per Box	Bags Per Pallet	Inoculant Index* Based on 100 Ton)	Range of Tons/Bag 65% M. Alfalfa	Range of Tons/Bag 35% M. Earlage	Range of Tons/Bag 28-30% M. Shelled Corn	Approx .56# Bushels per Bag
TD810	8' x 100'	1	16	1.0	80-90	70-80	80-90	
TD815	8' x 150'	1	12	1.4	120-140	120-130	130-140	3,825
TD820	8' x 200'	1	10	1.9	170-190	164-180	180-200	5,294
TD913	9' x 135'	1	12	1.6	140-160	134-150	150	4,411
TD915	9' x 150'	1	12	1.8	160-180	162	175	6,125
TD920	9' x 200'	1	10	2.2	200-225	205	230	6,765
TD1015	10' x 150'	1	10	2.2	200-220	180	202	5,940
TD1020	10' x 200'	1	8	3.0	270-300	247	278	8,175
TD1025	10' x 250'	1	6	3.6	340-360	324	350	12,250
TD1125	11' x 250'	1	6	4.2	390-420	350	410	14,350
TD1225	12' x 250'	1	6	5.2	450-500	420-480	450	16,071
TD1230	12' x 300'	1	4	5.7	550-600	500-550	500	17,238
TD1250	12' x 500	1	2	6.2	980-1000	840-900	900	32,000

- *Multiply the number of bags by the inoculant index to determine the number of buckets or pouches of inoculant needed. Example - 20 TD815 x 1.4 = 28 buckets.*

Note: Tons per bag are approximate. Weights may vary slightly depending on moisture level and crop types. High moisture shelled corn totals are figured from bagging with a standard Ag-Bag® machine. If using an Ag-Bag® grain bagger, totals will be approximately 20% less due to density. Also, when using the Masterseal® sealing strip, you can get approximately 2-4 more loads in the bag, depending on the size of your trucks or wagons.

DAIRY TERMS TO KNOW

maximize your profits.

Acid detergent fiber (ADF): Fiber measurement extracted with acidic detergent in a technique employed to help appraise the quality of forages. Includes cellulose, lignin, ADIN, and acid-insoluble ash. ADF is highly correlated with cell wall digestibility. The higher the ADF, the lower the digestibility or available energy.

Acid detergent insoluble nitrogen (ADIN): Protein or nitrogen that has become chemically linked to carbohydrates to form an indigestible compound. Also referred to as an insoluble crude protein.

Adjusted crude protein (ACP): Protein content adjusted for the amount of heat-damaged protein. Used in place of CP when ADIN makes up more than 10% of the CP content of a feed.

Amino acids: Building blocks of proteins. Used extensively for milk and muscle protein synthesis, as well as glucose synthesis in the liver.

Ammonia: A colorless nitrogen compound produced as protein and nonprotein nitrogen degrades or breaks down in the rumen. It can be used to synthesize bacterial protein.

Anion: A negatively charged ion or particle, such as chloride or sulfate. Anionic salts are nutritionally important in dry cow rations to aid in the prevention of milk fever.

Ash: The mineral matter present in feed. It is measured by burning the sample at 500°C until all organic matter is burned and removed.

Cation: A positively charged ion or particle.

Cellulose: The principle carbohydrate constituent of plant cell membranes. It is made available to ruminants through the action of cellulolytic bacteria in the rumen.

Carbohydrates (CHO): Includes the sugars, starch, cellulose, gums, and related substances. Carbohydrates are the largest component in the dairy cow diet and contribute 60 to 70 percent of the net energy used for milk production. Their abbreviation, CHO, indicates that they contain carbon, hydrogen, and oxygen.

Concentrate: A broad classification of feedstuffs that are high in energy and low in crude fiber (less than 18 percent). Included are cereal grains, soybean oil meal, cottonseed meal, and by-products of the milling industry such as corn gluten and wheat bran. A concentrate may be low or rich in protein.

Crude fiber (CF): That portion of feedstuffs composed of polysaccharides such as cellulose, hemicellulose, and lignin. These serve as structural and protective parts of plants (high in forages and low in grains). CF is no longer considered a viable measurement.

Crude protein (CP): Total protein in a feed. To calculate the protein percentage, a feed is first chemically analyzed for nitrogen content. Since proteins average approximately 16 percent nitrogen, the percentage of nitrogen in the analysis is multiplied by 6.25 to give the percent CP.

Degradable intake protein (DIP): Protein or nitrogen that is degraded in the rumen by microorganisms and incorporated into microbial protein or freed as ammonia.

Dry matter (DM): That part of feed which is not water.

Ensilage: Forage preserved by fermentation in a bag, silo, pit, bunker or stack, usually in chopped form. Also called silage.

Fiber: The cellulose portion of roughages (forages) that is low in TDN and hard to digest by monogastric animals.

DAIRY TERMS TO KNOW

Forage: The vegetative portion of plants in a fresh, dried, or ensiled state which is fed to livestock. Grasses and legumes cut at the proper stage of maturity and stored to preserve quality.

Green chop (fresh forage): Forages harvested (cut and chopped) in the field and fed directly to livestock. Also called zero grazing or soilage.

Hay: Dried forage (grasses, alfalfa, clovers) used for feeding farm animals.

High-moisture silage: Silage containing 70 percent or more moisture.

Legume: Clovers, alfalfa, and similar crops that can absorb nitrogen directly from the atmosphere through action of bacteria that live in their roots and use it as a nutrient for growth.

Lignin: A compound which, with cellulose, forms the cell walls of plants. It is practically indigestible.

Lipid: Any one of a group of organic substances that are insoluble in water though soluble in alcohol, eter, chloroform, and other fat solvents, and have a greasy feel. They are rich sources of dietary energy.

Nonprotein nitrogen (NPN): Used by rumen microorganisms to synthesize protein.

Neutral detergent fiber (NDF): A measurement of fiber after digesting in a nonacidic, nonalkaline detergent as an aid in determining quality of forages. Contains the fibers in ADF, plus hemicellulose.

Nitrogen balance: Nitrogen in the food consumed minus nitrogen in feces and nitrogen in urine (nitrogen retention).

Nitrogen-free extract (NFE): Consisting of carbohydrates, sugars, starches, and a major portion of materials classed as hemicellulose in feeds. When crude protein, fat, water, ash, and fiber are added and the sum is subtracted from 100, the difference is NFE.

Nonfiber carbohydrates: The highly digestible carbohydrate fraction of feeds consisting of starch , sugar, and pectin. Subtracting percent (DM basis) NDF, CP, ether extract (fat) and ash from 100 provides as estimate of NFC percent in feeds. (NFC%=100 n [%NDF + %CP + %fat + %ash])

Protein equivalent: A term indicating the total nitrogen content of a substance in comparison with the nitrogen content of protein (usually plant). For example, the nonprotein nitrogen (NPN) compounded, urea, contains approximately 45 percent nitrogen and has a protein equivalent of 281 percent (6.25 x 45 percent).

Ration: The amount of feed supplied to an animal for a definitive period, usually 24 hours.

Relative feed value (RFV): Developed primarily for use with legume or legume/grass forages, RFV combines digestibility and intake estimates into one number for an easy and effective way to identify and market quality hay. RFV is expressed as a percent compared to full bloom alfalfa at 100 percent RFV.

Roughage: Consists of pasture, silage, hay, or other dry fodder. It may be of high or low quality. Roughages are usually high in crude fiber (more than 18 percent) and relatively lower in NFE (approximately 40 percent).

Saturated fatty acids: A completely hydrogenated fat, each carbon atom is associated with the maximum number of hydrogen; there are not double bonds. Saturated fatty acids are solid at room temperature. Tallow is an example of a saturated fat, although approximately 50 percent of the fatty acids are unsaturated. Saturated fats tend to have less detrimental effects on rumen fermentation than unsaturated fats.

Silage: Green forage, such as grass or clover, or fodder, such as field corn or sorghum, that is chopped and compacted into a feed storage bag, silo, or bunker to create an anaerobic or air-free environment and undergoes an acid fermentation (lactic and acetic acids) that retards spoilage.

DAIRY TERMS TO KNOW

Total mixed ration (TMR): A blend of all feedstuffs (forages and grains) in one feed. A complete ration that fits well into mechanized feeding and the use of computers to formulate least-cost rations.

Unsaturated fat: A fat having one or more double bonds, not completely hydrogenated.

Urea: A nonprotein organic nitrogenous compound. It is made synthetically by combining ammonia and carbon dioxide.

Index

N

P

R

S

T

U

V

W

Appendix C discusses the bagging operation in greater detail than other sections of this manual. It is recommended that you review this section prior to starting to bag.

Table of Contents

BAGGING INSTRUCTIONS

In order to get the benefits without the risk of VOIDING the WARRANTY, the customer must:

- Prior to bagging read the Operator's Manual and the 3M's OF Silage (appendix B)
- Notify Ag-Bag® within 24 hours of the discovery of a bag failure. Ag-Bag® will provide for an onsite review of the situation.

1. THE CROP

A Maturity (Pre-bloom)
B Moisture Level (65 percent target)
C Crop Length (3/4" target) (See Appendix B)

2. BAG LOCATION – Pick an area using these recommendations:

A Blade the area to remove rocks and sticks.
B Good drainage site is important.
C Concrete, asphalt, gravel, or packed limestone, works well under bags.
D Pick a site away from rodents.
E Protect your site from livestock with fencing.

3. BAG INSTALLATION

Enclosed in each box of Ag-Bag® Bags, is an instruction sheet with pictures to help you properly install the bag on your Ag-Bagger®. Please take the time to understand the best method of bag installation. The Bag logo should be placed on the machine so the logo is between 12 and 3 o'clock. (See Diagram 1)

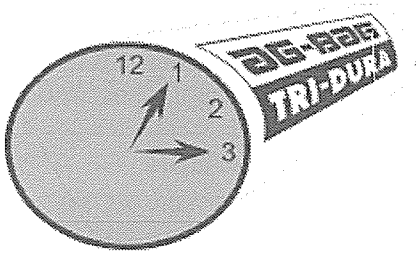

(Diagram 1)

The bag is overfilled when – the 5" vertical bar located between Ag-Bag® logos on the bag is stretched to over 5-1/2" (See Diagrams 2a and 2b)

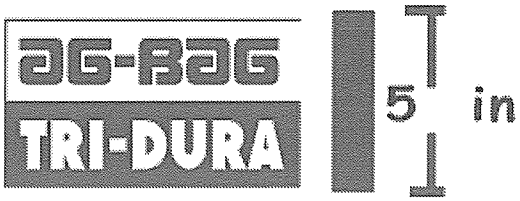

(Diagram 2a)

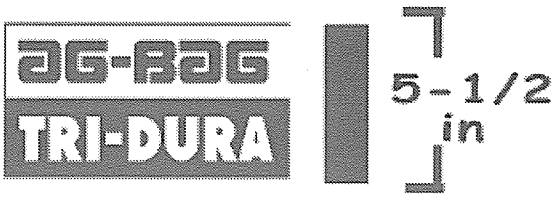

(Diagram 2b)

4. BAGGING PRESSURE

A When filling the bag, is should not be stretched more than 2 inches above the tunnel nor should the bag push against the cables.

B LESS brake press is required when:

1 Bagging up hill
2 Bagging with a large tractor
3 Bagging in muddy or soft sandy soils
4 Bagging extremely wet feed (above 75% moisture)
5 Bagging dry grains (makes a flatter bag), the bag will not always reach to top of tunnel.
6 Bagging oats and winter forages (NOTE: These should only be packet to the top of the tunnel because of swelling during storage.)

C MORE brake pressure is required when:

1 Bagging on hard surfaces, concrete, asphalt, etc.
2 Bagging with motorized Ag-Bagger®
3 Bagging down hill

5. SEALING AND VENTING – Very Important!!

As soon as the bag is filled, seal the finished end. As outlined in the instruction sheet. The faster oxygen is eliminated, the quicker the fermentation process can begin, it is very important to vent the bag. (See Appendix B)

6. PROTECTION FROM WIND DAMAGE

Wind damage can be caused by wind whipping the loose ends of the Ag-Bag® Bag. To prevent damage, the loose bag end needs to be secured with MasterSeal or by placing tires or other soft material on the end of the bag. Wind damage can cause small cracks and eventually wear a hole that allows air to penetrate, causing feed damage. A tightly secured bag will add to the life of the bag.

7. AG-BAG® BAG MANAGEMENT AND INSPECTION

Periodic inspection of the bag is essential to maintain an oxygen free environment in the bag. It is recommended that repairs be made with Ag-Bag® mending tape as soon as they are discovered.

8. NORMAL USAGE LIFE OF AG-BAG® BAGS

Rotate stored crops – unpack in same order as packing. Use the oldest feed first.

A Ag-Bag® bags located in the U.S.A. along the Canadian border, in all of Canada, Northern Europe, and in similar climates should be fed within 24 months.

B Ag-Bag® bags located in the Central U.S., but more the 500 miles north of the Mexican border and the Gulf coast, should be fed within 24 months.

C Ag-Bag® bags locate in extremely hot and sunny regions of the world, such as the southern most areas of the U.S. and in Mexico, the Caribbean, Middle East, etc., should be fed within 12-18 months. For more specific recommendations contact your Ag-Bag® Dealer.

BAG INFORMATION

Bag Code	Bag Size	Inoculant Index	Tons/Bag 65% Earlage	Tons/Bag 35% Shelled Corn	Tons/Bag 28-30% Per Bag	Approx. Bushels Per Bag (Based on 56# bushel)
TD810	8' x 100'	1.0	80-90	70	80	
TD815	8' x 150'	1.4	120-140	120	130	3,825
TD820	8' x 200'	1.9	170-190	164	180	5,294
TD913	9' x 135'	1.6	140-160	134	150	4,411
TD915	9' x 150'	1.8	160-180	162	175	6,125
TD920	9' x 200'	2.2	200-225	205	230	6,765
TD1015	10' x 150'	2.2	200-220	180	202	5,940
TD1020	10' x 200'	3.0	270-300	247	278	8,175
TD1025	10' x 250'	3.6	340-360	324	350	12,250
TD1125	11' x 250'	4.2	390-420	350	410	14,350
TD1225	12' x 250'	5.2	490-520			
TD1230	12' x 300'	5.7				
TD1250	12' x 500'	10				
TD1450	14' x 500'	12				

NOTE: The tons per bag are approximate and will vary based on moisture and length of chop and crop types. High moisture shelled corn totals are figured from bagging with a regular Ag-Bag machine. If using an Ag-Bag Grain Bagger, totals will be approximately 20% less, due to density. Also, when using the MasterSeal sealing strip you can get approximately 2-4 more loads in the bag, depending on the size of your bag.

SUGGESTED FEED OUT RATES PER DAY

	Winter Rates Oct. - April		Summer Rates May - Sept.	
Bag Size	Feet/Day	Tons/Day	Feet/Day	Tons/Day
8'	1'	1	2'	2
9'	1'	1	2 1/4'	2 3/4
10'	2'	3	2 1/2'	4
11'	2 1/4'	4	2 3/4'	5
12'	2 1/2'	5 1/2	3'	6 1/2

CAPACITY OF TONS PER RUNNING FOOT OF BAG

8'	1 ton
9'	1 1/4 tons
10'	1 1/2 tons
11'	1 3/4 tons
12'	2 1/4 tons

Index